Microwave Landing System Set-Up/Tear-Down Procedures

OP-M-510

Revision 0

Approved by [redacted]

Posting Date 4/27/06

Active Divisions/Departments
Area Directorate

Raytheon Polar Services Company
Owning Division or Organizational Component
Contract No. OPP 0000373

Hard Copy Not Controlled—Controlled Copy Available On-line

Table of Contents

Purpose 1
Scope/Applicability 1
Terms and Definitions 1
Responsibilities 5
Discussion 5
Pre-Commissioning Procedures 6
Determining the MLS Setback Distance 6
Determining and Flagging the Equipment Pad Boundaries 7
Preparing the Pad for MLS Placement 8
Marking the MLS Setback Line 8
Marking the MLS Boresight Line 8
Commissioning Procedures 9
Recheck and log the required survey data points. 9
Position Generator Sled 9
Snow-Cover skis on both Shelter and Generator Sled 9
Lower Generator Stairs 10
Wire Generator Sled to MLS Shelter (Flag Power Cable) 10
Lower Shelter Stairs 10
Install the Generator System Starting Batteries 11
Reprogram the Generator System Automatic Transfer Switch 11
Start the MLS Generator 12
Heat the MLS Shelter 12
Install the DME Antenna 13
Connect the DME Coaxial Cable 14
Position Far Field Monitor Tower and Antenna 14
Wire FFM and Flag signal cable 16
Install Storage Batteries in MLS(Az, El and DME) Uninterruptible Power Supplies (UPS) 16
Deploy MLS Elevation Antenna 17
Deploy MLS Azimuth Antenna 20
Install UPS for radiotelephone and FreeWave radios 21
Remove Circuit Board Covers (El & Az) 21

Install Computer(s) 22
Energize System 22
Perform Voltage Checks 22
Perform System Alignment and Test 22
Level Shelter (Not applicable to MLS-00) 23
Boresight the Azimuth Antenna 23
Level Elevation Antenna 23
Perform Electronic Alignment of the MLS 23
Install & Connect FreeWave radios 24
Install RCSU in Control Tower 24
Install Telepoint radiotelephones and antenna 24
Install Internet connectivity 24
Decommissioning Procedures 24
MLS SHELTER 25
MLS GENERATOR 32
Records 34
Attachments, Appendices 34

Purpose

The Purpose of this Standard Operating Procedure (SOP) is to establish guidelines for annual commissioning and decommissioning of the Microwave Landing Systems (MLS) on the airfields at McMurdo Station.

Scope/Applicability

This Standard Operating Procedure (SOP) provides specific guidance regarding actions that must be accomplished before the MLS can be placed into operation. It also covers steps that must be taken to decommission the MLS and place it into winter storage. The SOP applies to all personnel involved in commissioning and decommissioning the MLS.

Terms and Definitions

Throughout this document, information of specific importance is provided in the form of **WARNINGS, CAUTIONS and NOTES**.

A **WARNING** indicates a hazard that may cause severe injury or death if not properly dealt with.

A **CAUTION** indicates a hazard that may cause serious damage to equipment if not properly dealt with.

A **NOTE** indicates a recommended method or procedure that will simplify task completion or prepare the worksite for a subsequent action.

AC
Abbreviation for "Alternating Current"- an electrical transmission system in which the direction of electrical current flow reverses at a set frequency.

AGE
Abbreviation for "Aerospace Ground Equipment" the specialized equipment used to maintain aircraft. Also used to identify the shop that maintains AGE assets.

ATS
Abbreviation for "Automatic Transfer Switch"

Az
Abbreviation for "Azimuth" – used to describe the portion of the MLS system that provides "left/right offset" (x-axis) guidance.

Boresight
The direction of alignment of the primary transmission lobe of directional electronic antenna. Or the act of aligning an antenna.

Berm
A large pile or mound of snow, (often with a flattened crest, built to prevent excessive snow drifting around equipment stored upon it). Alternatively, the act of piling or mounding snow around an object.

B-5 stand
A portable, "scissors-lift" AGE maintenance platform, frequently used to access the underside of aircraft wings.

C-17
A large, wide-bodied, high-wing, four-engine, turbo-fan powered, cargo aircraft built by the Boeing Aircraft Company and flown by the United States Air Force in support of the USAP.

Cloud Ceiling
A layer of clouds that obscures view of the sky from the ground and conversely, obscures view of the ground from descending aircraft.

Control Tower
The airfield facility from which aircraft landings, take-offs and ground movements are directed.

CVS
Controlled Version System – An archival system for maintaining document configuration

DC
Abbreviation for "Direct Current" – an electrical transmission system in which the flow of electric current is always in the same direction.

DME
Abbreviation for "Distance Measuring Equipment" – used to describe the portion of the MLS system that provides horizontal separation (z-axis) information.

DNF
Abbreviation for "Do Not Freeze" applied to equipment or material that would be damaged if exposed to freezing temperatures.

El
Abbreviation for "Elevation" – used to describe the portion of the MLS system that provides height (y-axis) information.

°F
Abbreviation for "temperature, in degrees, measured with the Fahrenheit temperature system"

FFM
Abbreviation for "Far Field Monitor" a remote sensing antenna used to monitor MLS system stability

FreeWave®
Brand name for a system of two-way, microwave radio-link, communication devices

Genie® Lift
Brand name for a variety of portable, elevating work platforms

Glideslope
The ideal path for a landing aircraft to descend along to touch down at the desired point on the airfield runway.

HVAC
Abbreviation for "heating, ventilation and air conditioning"

IT/COMMS
Abbreviation for the Communications Office of the Information Technology Directorate of Raytheon Polar Services Company

LC-130
A tactical, narrow-body, high-wing, four-engine, turbo-prop (propeller) powered, cargo aircraft capable of landing on either wheels or skis, built by the Lockheed Martin Company, and flown by the New York Air National Guard in support of the USAP.

Minimum Threshold Clearance Height
The distance above ground level that a landing aircraft must maintain when passing over the initial end (Threshold) of a runway.

MLS
Abbreviation for "Microwave Landing System" a precision landing aid for aircraft

MLS-00
Identifying abbreviation for the first MLS deployed to Antarctica – distinguished by its supporting tracked-trailer, and the use of separate shelter structures for Az and El MLS systems

MLS-01
Identifying abbreviation for the second MLS deployed to Antarctica – distinguished by its supporting sled, and the use of a single, "unified" shelter structure for both Az and El MLS systems

NOTAM
Acronym for "Notice to Airmen" – a system used to relay changing aeronautical conditions and restrictions to aviators

Phase Center
The mid-point of the emitter array of a "phased-array" antenna

RCSU
Abbreviation for "Remote Control Status Unit" – a monitor used to advise control tower personnel of the current operational condition of the MLS

Runway Threshold
The boundary that marks the end of the useable portion of a runway

SD
Abbreviation for "setback distance" – the distance by which an object (such as the MLS shelter) is separated from the end of the runway.

SOP
Abbreviation for "Standard Operating Procedure"

Telepoint®
Brand name for a system of radiotelephone equipment

Track Packing
A procedure of compacting a snow surface by driving a track-borne vehicle back and forth over the surface so that it will bear greater weight,.

T-Site
Abbreviation for "Transmission Site" a location at McMurdo Station where radio transmission antennas are clustered

UPS

Acronym for "Uninterruptible Power Supply"

USAP

Acronym for the "United States Antarctic Program" an umbrella agency under which all Antarctic research supported by the United States National Science Foundation is conducted

USAF

Acronym for the "United States Air Force"

Responsibilities

The USAP Airfield Manager is responsible for ensuring that adequate aerial navigation aids are provided and maintained at USAP airfields in Antarctica.

The McMurdo Surveyor is responsible for providing geographic positioning information, staking equipment sites prior to equipment emplacement, and taking and recording accurate measurements of equipment locations after placement.

The Lead MLS Technician is responsible for:

- Ensuring that the MLS equipment is properly readied for certification
- Scheduling technicians to provide complete (24/7) maintenance coverage during the MLS operating season
- Coordinating support from other organizations as required

All MLS Technicians are required to read , become familiar with, and follow the information laid out in this procedure.

Discussion

The Microwave Landing System is a precision navigation aid, capable of guiding aircraft to a safe landing during periods of reduced visibility and low cloud ceilings. To ensure that the system performs this critical task in the safest possible manner, the MLS must be precisely positioned and correctly aligned. The MLS was originally designed to be installed in a permanently fixed-position, not moved on a semi-annual basis. As a result, system

procedures detailed in this SOP have been developed through a process of trial-and-error. While not necessarily perfect, they detail the best method found, to-date, for commissioning and decommissioning the MLS system at McMurdo Station. Suggestions for improving these procedures are welcomed and should be addressed to the MLS Lead Technician. The procedures detailed in this SOP are divided into four sections:

- Pre-Commissioning Procedures
- Commissioning Procedures
- Decommissioning Procedures
- Storage Procedures

Technicians should familiarize themselves with all sections of the procedure, as actions taken while accomplishing one task may have a direct effect upon the degree of difficulty encountered in accomplishing a subsequent step.

Pre-Commissioning Procedures

When installing the MLS on the airfield, there are six operations that must be performed in sequence. Those six operations are:

1. Determine MLS setback distance from the runway (or skiway) threshold.
2. Determine and flag the boundaries of the MLS equipment pad.
3. Prepare the pad for MLS placement.
4. Mark the MLS setback line and boresight line.
5. Position the MLS sled and the Generator Sled.
6. Recheck and log the required survey data points.

Determining the MLS Setback Distance

Before positioning the MLS, it is necessary to compute the correct setback distance between the elevation antenna and the runway threshold. To compute this distance, you must determine three factors:

- The desired aircraft glideslope angle
- The Minimum Threshold Crossing Height (MTCH)
- The height of the Elevation antenna phase center above the runway surface.

The aircraft glideslope angle is dependent upon a variety of factors. For USAP purposes, the standard glideslope angles are 2.5° for LC-130 aircraft and 3.0° for C-17 aircraft. The established MTCH is 50 feet.

The height of the Elevation antenna phase center is dependent upon two factors:

- The height of the Elevation antenna phase center within the MLS unit
- The elevation of the MLS unit in comparison to the height of the runway surface, at the point on the runway centerline, where a line drawn perpendicular to the centerline intersects the elevation antenna.

In the illustration below, the setback distance (SD) from the runway threshold is equal to the Remainder of the Minimum Threshold Clearance Height (MTCH) minus the height of the Elevation Antenna Phase Center above the runway (h), divided by the tangent of the glideslope angle (tan θ).

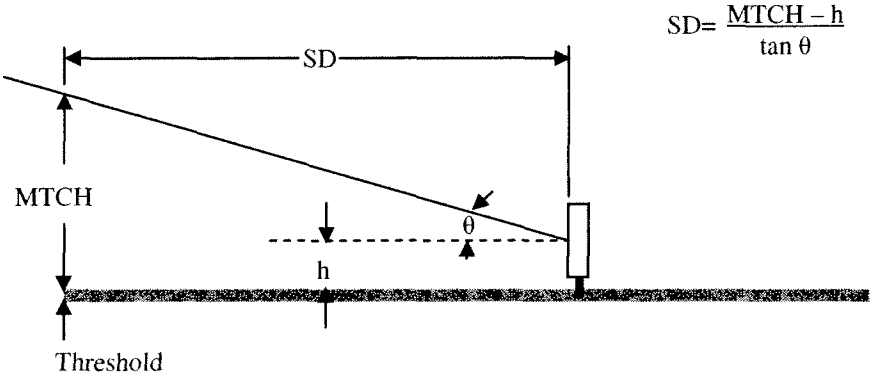

Figure 1 – MLS Threshold Setback Calculation

Determining and Flagging the Equipment Pad Boundaries

The McMurdo Surveyor will locate and flag the boundaries of the MLS equipment pad. It is the responsibility of the Lead MLS Technician to coordinate the layout and flagging with the

McMurdo Surveyor in advance. Prior to accomplishing the layout, the surveyor will require the following information:

- MLS setback distance from threshold
- MLS offset from runway centerline
- Desired size of the equipment pad.

The Surveyor will not mark the MLS setback line until after the equipment pad has been prepared.

Preparing the Pad for MLS Placement

Fleet Operations will prepare the equipment pad for MLS placement. It is the responsibility of the Lead MLS Technician to coordinate pad preparation with Fleet Operations in advance.

- If the MLS is being deployed at the Sea Ice runway, preparation will consist of scraping the pad down to the ice surface.
- If the MLS is being deployed at Williams Field, preparation will consist of grading, leveling and track-packing the snow surface.

Marking the MLS Setback Line

The McMurdo Surveyor will establish and flag the MLS Setback Line and Boresight Line. This will not be accomplished until after Fleet Operations has completed preparing the MLS equipment pad. It is the responsibility of the Lead MLS Technician to notify the McMurdo Surveyor when pad preparation is completed.

The Surveyor will place one red flag at the specified setback distance and the specified offset from the runway centerline. The surveyor will place a second red flag at the specified setback distance, twenty (20) feet beyond the specified offset from the runway centerline (specified offset **plus** 20').

Marking the MLS Boresight Line

The MLS Boresight line is used to align the MLS Azimuth antenna parallel to the runway centerline. The Lead MLS technician will provide the McMurdo Surveyor with a reference point (marked on the MLS Sled ski, on the "radome" side of the MLS shelter) corresponding to the centerline of the MLS Azimuth antenna. The McMurdo Surveyor shall determine exact distance from this reference point to the centerline of the runway. The McMurdo Surveyor will then establish and mark two additional reference points at the same distance from the

runway centerline. The first additional reference point will be located approximately 200 feet from the MLS shelter and the second additional reference point shall be at the runway threshold. Marking shall consist of one red flag for each point.

NOTE: If the preferred location of the first additional reference point places the point within the boundaries of an aircraft taxiway, shorten the distance between the MLS and the reference point as necessary, to move the point at least three feet outside the taxiway boundary.

Commissioning Procedures

Recheck and log the required survey data points.

The McMurdo Surveyor will confirm the survey data while establishing the MLS Boresight line. The data required includes:

MLS distance from Runway Centerline

MLS setback distance from Runway Threshold

MLS height above Runway Surface

Position Generator Sled

The generator sled must be positioned so that it is as far from the runway centerline as practical. The offset distance will be determined by the length of the power umbilical cord available. Fleet Operations (guided by an MLS technician) will position the generator sled. It is the responsibility of the MLS Lead Technician to coordinate Fleet Operations assistance in positioning the generator sled

Snow-Cover skis on both Shelter and Generator Sled

After both sleds are positioned, Fleet Operations will push snow up to the skis to cover them and prevent excessive, melt-induced settling. It may be necessary for the technicians to shovel some of the snow by hand, to cover portions of the skis that Fleet Operations heavy equipment cannot reach.

Lower Generator Stairs

WARNING: The stairs are extremely heavy. A minimum of three people are required to safely retract and secure them. Failure to adhere to this requirement may result in serious injury or death if the stairs fall and strike an individual while being retracted.

Lower the stairs on the generator sled and pin them in place.

Wire Generator Sled to MLS Shelter (Flag Power Cable)

If an umbilical power cable is available, connect it between the generator sled and the MLS shelter. Use pairs of crossed bamboo poles, spaced approximately 3-4 feet apart, to support the cable and keep it suspended above the snow surface. This will prevent drifting snow from covering the cable and freezing it into place. If the cable slips between the bamboo poles and drops to the ground, it may be necessary to hold the poles together by tying them together with electrical tape or similar material. If no umbilical cable is available, it will be necessary to have the FEMC Line Crew install exterior-grade electrical cable between the generator sled and the MLS Shelter. Use a series of paired black flags, (two flags crossed to form an "X") to mark the electrical cable route so that personnel and vehicles do not cross it.

Lower Shelter Stairs

WARNING: The stairs are extremely heavy. A minimum of three people are required to safely retract and secure them. Failure to adhere to this requirement may result in serious injury or death if the stairs fall and strike an individual while being retracted.

Lower the stairs on the MLS shelter and pin them in place.

CAUTION: Do not allow the MLS Shelter stairs to become drifted into the snow. If it becomes necessary to pivot the shelter (to align the MLS Azimuth antenna) the stairs must be free to move with the shelter. Failure to follow this precaution may cause damage to the stairs, the shelter deck, or the shelter pivoting mechanism. It may also cause the shelter to pivot back out of position after alignment has been accomplished.

Install the Generator System Starting Batteries

Each of the MLS generators has a 12 volt, lead-acid storage battery that is used for starting the diesel engine. The batteries are normally removed for winter-over storage. It will be necessary to reinstall the batteries before starting the generators.

WARNING:

Storage batteries produce explosive Hydrogen gas. Do not allow fire or flame to come in close proximity to storage batteries. Do not smoke around storage batteries. Avoid sparks caused by shorting battery terminals or wiring. Wear personal protective equipment (including goggles) when installing, removing or servicing storage batteries.

Storage batteries contain acid that can cause severe burns. Avoid coming into contact with spilled acid or acid residue. Wear personal protective equipment (including goggles) when installing, removing or servicing storage batteries..

When batteries are connected in series, a short-circuit hazard between batteries exists even after the ground connection at the end of the series is disconnected. Exercise extreme caution when connecting or disconnecting batteries in series.

Reprogram the Generator System Automatic Transfer Switch

WARNING: When energized, the Automatic Transfer Switch unit contains voltages that are potentially lethal. DO NOT OPEN the cover of the Automatic Transfer Switch when either generator is running. Failure to follow this warning may result in serious injury or death by electrocution.

The Automatic Transfer Switch (ATS), in the generator shelter, uses a small storage battery to maintain programming memory. The battery is normally removed for winter-over storage. If the battery has been removed, reinstall it and then reprogram the generator starting sequence, using the ATS manufacturer's operating manual manual. The operating manual is available electronically in the McMurdo AGE shop. (Electronic copies of all MLS manuals and procedures are also kept in the IT/Comms Controlled Version System (CVS) directory, to maintain version control.)

Start the MLS Generator

CAUTION: Before starting either MLS generator, check the crankcase oil level on ***BOTH*** generators, to ensure that sufficient lubricating oil is present. In the event that one generator shuts down unexpectedly, the Automatic Transfer Switch may attempt to start the other generator immediately and without warning. Failure to follow this precaution may result in serious damage to the second generator if sufficient lubricating oil is not present in the engine crankcase.

NOTE: If the MLS generators have been shut off for a prolonged period (particularly in extremely cold temperatures) the diesel engines may be difficult to start. Each of the MLS generators is equipped with a fuel-fired, coolant heater that warms the engine by circulating heated coolant through the engine block. Before starting either MLS generator, the coolant heater should be operated for at least 2-3 hours. Failure to follow this precaution may result in inability to start the generator engine and unnecessary wear on the starter.

To start the MLS generator, depress the "start" switch on the engine control panel (mounted on top of the generator at the end farthest from the air intake). Hold the switch in until the engine starts and continues to run.

Heat the MLS Shelter

NOTE: The Distance Measuring Equipment (DME) in the MLS shelter has proven to be extremely sensitive to cold temperatures. A functioning DME unit may go into alarm mode if exposed to cold air for even a brief period. To avoid unnecessary DME alarms, the interior of the MLS shelter should be heated to at least 60° Fahrenheit (°F) before the DME is energized.

The MLS shelter is equipped with a two-stage, electric, heating element in the heating, ventilation and air-conditioning (HVAC) system. A standard, residential, wall –mounted thermostat controls the temperature of the conditioned space. To heat the MLS shelter, adjust the thermostat to 60° F. or higher.

Install the DME Antenna

WARNING:

The antenna weighs approximately 70 pounds and is awkward to lift or carry. Two people are required to lift or carry the antenna.

A man lift platform, such as the AGE Genie lift, must be used to lift and place the antenna on its mounting bracket.

The antenna is top heavy. The rope or strap used to secure the antenna to the man lift platform must be secured to the antenna above the antenna's center-point (more than five (5) feet above the base of the antenna) as well as to the machined aluminum ring at the bottom of the antenna. Failure to adhere to this instruction may cause severe injury to personnel if the antenna tips and/or falls.

1. Attach a suitable lifting rope or strap to the aluminum base ring of the antenna, loop the rope or strap around the antenna (slightly more than half-way along the length of the antenna from the aluminum base ring) and pass the rope or strap under itself, forming a "cinch" or "collar" around the antenna. (See illustration below.)

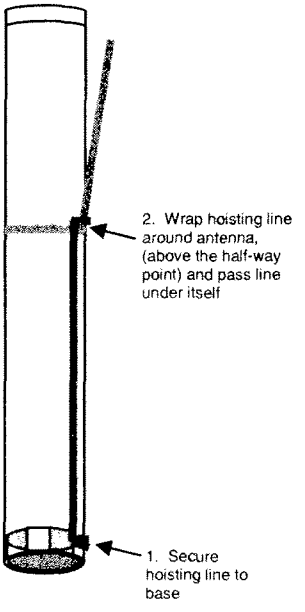

Figure 1. Preparing DME Antenna for hoisting

2. Secure the hoisting rope or strap to the lift platform and lift the antenna into place.
3. Working from a ladder, a second technician should guide the base of the antenna into place on the mounting bracket and secure it with six (6) hex-head bolts and nuts.

NOTE: For MLS-00 only, if snow has been bermed up around the transport trailer, the DME antenna can be installed using a ski-mounted, type "B-5", telescoping maintenance stand (available from AGE) instead of the Genie manlift platform.

Connect the DME Coaxial Cable

The coaxial cable that connects the DME Transmitter to the DME antenna must be passed out through a penetration in the shelter wall, inserted through the bottom of the antenna base, and connected to the appropriate threaded connector on the base of the antenna. After the coaxial cable has been connected, close and secure the metal band around the base of the antenna.

Connect the other end of the DME coaxial cable to the connector on the right front rail of the DME electronics cabinet.

Position Far Field Monitor Tower and Antenna

The Far Field Monitor (FFM) Antenna is mounted at the top of a portable mast, placed approximately 85 feet from the center of the Azimuth antenna radome. To properly locate the antenna, complete the listed steps in the order presented:

4. Using a 100-foot steel measuring tape, scribe an arc in the snow, 85 feet from the center of the Azimuth antenna radome.
5. Again using the 100-foot tape, scribe an arc in the snow, 75 feet from the center of the Elevation antenna radome.
6. Mark the point where the two arcs intersect. This is the location where the FFM mast will be installed.
7. Using an ice auger with a 5-inch diameter bit, drill a hole at least three feet deep in the snow/ice.
8. Insert a 4"x4" wooden post into the hole and pack snow around it. The top of the post should be flush with the snow/ice surface. (If necessary, cut the post to the required height.) Pour fresh water into the packed snow and allow it to develop into ice. This will provide a secure base for the FFM mast and prevent the mast from sinking into the ice.
9. Allow at least 24 hours for the snow and water slurry to set up around the post.
10. Position the FFM mast with its base immediately adjacent to the 4x4 post.

CAUTION: The small radome over the FFM antenna is fragile. Use care when handling the antenna while installing to the mast. It may help to support the top of the mast off the snow surface with blocking such as one or more 4x4 posts, laid horizontally under the mast.

11. Install the FFM antenna on the mast.
12. Install the coaxial cable between the FFM antenna and the electrical box installed on the mast.
13. Attach three guy wire assemblies to the FFM mast. Unscrew the turnbuckle on each guy wire assembly until the threaded rods extend approximately two threads into the turnbuckle.

WARNING: The mast is extremely heavy (Over 100 pounds.) At least three people should be on-hand to raise the mast. Failure to follow this precaution may result in serious injury or death if the mast falls on personnel.

14. Using at least three people, raise the mast upright, positioning the tower base over the 4x4 post.
15. While one individual steadies the mast, stretch the guy wires out as far from the tower as possible. The guy wires should be positioned at approximately 120° intervals around the mast. Mark the maximum reach of each guy wire anchor on the snow/ice surface. After the reach of all three guy wire anchors has been marked, lower the mast to the snow surface.
16. To install guy wires on an ice surface, skip to step 14. To install guy wires on a snow surface, from the maximum reach of each guy wire, (marked in the previous step) move back towards the mast approximately two feet, and dig a hole 18 inches deep for the guy wire anchor. It may be helpful to drill a series of holes with an ice auger to loosen the snow to be removed. Disassemble the guy wire turnbuckle and install the anchor portion at the bottom of the excavated hole. To bury the anchor, alternately shovel in a layer of snow approximately six inches thick and then compact the snow by walking on it. Continue until the hole is filled and compacted level with the surface. Allow 24 hours for the snow to set up before placing a load on the anchors. After allowing the snow to set up, reassemble and tension the guy wire turnbuckles.
17. To install guy wires on an ice surface, from the maximum reach of each guy wire, (marked in step 12) move back towards the mast approximately six inches and use an ice auger with a 5-inch diameter bit to drill a hole at least thirty inches deep, angling the hole slightly towards the mast as it deepens. Insert a 4x4 anchor post into the hole and fill in around it with the pulverized ice removed by the drill. Pour fresh water into the pulverized ice to create a slurry. Allow at least 24 hours for the slurry to freeze solidly before placing a load on the anchor. Install an eyebolt of at least $^{3}/_{8}$" diameter through the 4x4 post, with the eye on the side of the 4x4 post that faces the mast. Use a clevis fitting to attach the guy wire turnbuckle to the eye bolt. After allowing the ice slurry to freeze solid, reassemble and tension the guy wire turnbuckles.

18. After the mast is erected, refer to Paragraph 2.7 of the manufacturer's Operation and Maintenance Manual, Microwave Landing System, Angle Subsystem, (Volume 1 of 4)for Elevation antenna alignment instructions.

Wire FFM and Flag signal cable

Use a series of paired black flags, (two flags crossed to form an "X") spaced approximately 3-4 feet apart, to support the FFM signal cable and keep it suspended above the snow surface. This will prevent drifting snow from covering the cable and freezing it into place, and will also mark the cable route so that personnel and vehicles do not cross it.. If the cable slips between the bamboo poles and drops to the ground, it may be necessary to hold the poles together by tying them together with electrical tape or similar material. Connect the individual wires of the signal cable to the appropriate terminal board connectors in the electrical box attached to the FFM and the MLS shelter.

Install Storage Batteries in MLS(Az, El and DME) Uninterruptible Power Supplies (UPS)

Each subsystem of the MLS (Az, El and DME) has its own uninterruptible power supply. The AZ and EL UPS each use three, 12-volt, storage batteries (with screw-thread type battery terminals). The DME uses four batteries of the same style. The batteries must be connected in series, so that they provide a nominal 36 volts for the AZ and El system and a nominal 48 volts for the DME. Jumper wires with attached ring terminals are prepositioned in each battery box.

The positive output cable should be marked inside each battery box. If the positive cable is not marked, use an ohmmeter to identify the cable that is routed through the power switch on the outside of the box. The switched cable should be attached to the positive terminal of the battery assembly.

On the Az and El MLS subsystems, the UPS battery cable is connected to the subsystem via a keyed, screw-on, electrical connector that attaches on the underside of the subsystem power supply. On the DME subsystem, the power cable attaches to lugs on the power supply bus bar, inside the right rear corner of the chassis. The DME bus bar consists of power and ground strips, separated by a non-conductive insulator strip. To identify which side of the strip is powered, energize the DME internal power supply and check polarity of the bus bar lugs with a voltmeter set to a DC value greater than 50 volts.

Deploy MLS Elevation Antenna

NOTE: Due to a design configuration change, the method for deploying the Elevation antenna differs between MLS-00 and MLS-01.

To deploy the elevation antenna on **MLS-00 ONLY**, perform steps 1 through 10 below.

To deploy the elevation antenna on **MLS-01 ONLY**, skip to steps 11 through X below.

WARNING:

Before removing the hex-head bolts that secure the antenna upper bracket to the guide plate, ensure that the bottom of the antenna is properly supported.

On MLS-00, proper support consists of a black jacking bracket, bolted to the base of the antenna, and supported by two, ¾", threaded rods, with jacking nuts on the rods screwed firmly against the **bottom** of the jacking bracket.

Failure to follow these instructions may result in death or serious injury if an improperly supported antenna falls on personnel.

1. **On MLS -00 ONLY -** At the top of the antenna, remove the two, ½" diameter hex-head bolts that secure the antenna upper bracket to the upper guide plate.
2. **On MLS -00 ONLY -**There is an upper guide plate, bolted to the top of the radome frame. Two, silver, bullet-shaped pins project down from the guide plate, through an upper bracket bolted to the top of the antenna. Lower the antenna (by loosening the two jacking nuts under the jacking bracket) until approximately ½" of the two, bullet-shaped, silver pins on the guide plate remains projecting through the antenna bracket.
3. **On MLS -00 ONLY -**Remove the cover plate over the antenna pedestal mounting pit.
4. **On MLS -00 ONLY -**In the pedestal mounting pit, ensure that one (1) jacking nut is installed on each of the three (3), ¾", threaded jacking rods. Then, install the antenna pedestal and triangular leveling plate on the jacking rods. Install one nut at the top of each jacking rod.
5. **On MLS -00 ONLY -**Using the jacking nuts under the antenna pedestal leveling plate, raise the antenna pedestal until the mounting pad on the pedestal is level with the mounting pad on the antenna. (Bolt holes roughly aligned.) Then, run another nut down each of the jacking rods until it rests firmly against the leveling pad.

WARNING:

The elevation antenna is extremely heavy (over 200 pounds) and unwieldy. To prevent tipping, ensure that either the top or bottom of the antenna is secured at all times. Follow the steps listed below in the exact order they are presented. Failure to adhere to these instructions may result in death or severe injury if the antenna falls on personnel.

A minimum of two personnel are required to safely accomplish the following procedures.

6. **On MLS -00 ONLY -**At the base of the antenna, there is a black, "L-shaped" bracket on each side of the antenna. Each "L-shaped" bracket is secured to the antenna jacking bracket with two, hex-head bolts. Remove the hex-head bolts.
7. **On MLS -00 ONLY -**Carefully, slide the antenna off of the jacking plate, onto the antenna pedestal.
8. **On MLS -00 ONLY -**While holding the antenna against the pedestal, insert three (3) hex-head bolts through the bottom row of mounting holes on the pedestal (one on each side of the mounting plate and one inside the pedestal tube) and into the antenna. Install a nut on each of the three hex-head bolts. Tighten these nuts finger tight.

CAUTION: When performing the next step, pay careful attention to the relationship between the antenna top bracket and the upper guide bracket. **Do not allow the antenna top bracket to drop below the end of the silver, bullet-shaped guide pins.** It may be necessary to adjust the angle of the antenna pedestal to avoid placing unnecessary stress on the guide pins or the antenna. Failure to adhere to this instruction may cause severe damage to the antenna and the radome, including possible failure of the antenna mounting bolts.

9. **On MLS -00 ONLY -**Using the jacking bolts under the antenna pedestal leveling plate, tilt the pedestal towards the antenna until you can install the remaining three (3) hex-head bolts through the top row of mounting holes on the pedestal (one on each side of the mounting plate and one inside the pedestal tube.) Tighten all six (6) mounting bolts firmly.
10. **On MLS -00 ONLY -**Using the jacking bolts under the antenna pedestal leveling plate, lower the antenna until the antenna upper bracket clears the two, silver, bullet-shaped pins that project down from the upper guide plate. Then, tilt the top of the antenna away from the radome and raise it to the desired height. **This completes the deployment procedure for MLS-00 ONLY.**

WARNING:

Before removing the hex-head bolts that secure the antenna upper bracket to the guide plate, ensure that the bottom of the antenna is properly supported.

On MLS-01, proper support consists of the antenna pedestal and triangular leveling plate, supported by three, ¾", threaded rods, with jacking nuts on the rods screwed firmly against the bottom of the leveling plate.

Failure to follow these instructions may result in death or serious injury if an improperly supported antenna falls on personnel.

11. **On MLS -01 –** At the top of the antenna, remove the two, ½" diameter hex-head bolts that secure the antenna upper bracket to the upper guide plate.

CAUTION: When performing the next two steps, pay careful attention to the relationship between the antenna top bracket and the upper guide bracket. It may be necessary to adjust the angle of the antenna pedestal to avoid placing unnecessary stress on the guide pins or the antenna. Failure to adhere to this instruction may cause severe damage to the antenna and the radome, including possible failure of the antenna mounting bolts.

12. **On MLS -01 ONLY –** Remove the cover plates over the antenna pedestal mounting pit.
13. **On MLS -01 ONLY –** The triangular leveling plate under the antenna pedestal **is** supported on jacking nuts, that are threaded onto (3) ¾", threaded jacking rods. Lower the antenna as far as possible, by lowering the jacking nuts.
14. **On MLS -01 ONLY –** Free the top of the elevation antenna by unscrewing and removing the two, silver, bullet-shaped pins that project down from the upper guide plate, through matching holes on the antenna top bracket. Store these pins for later reuse.
15. **On MLS -01 ONLY –**Use the three jacking nuts, located under the triangular antenna leveling plate, to level the elevation antenna and raise it to the desired height.
16. **On MLS -01 ONLY –**Run a locking nut down each of the three threaded jacking nuts, and fasten it snugly. **This completes the antenna deployment procedure for MLS-01 ONLY.**

Deploy MLS Azimuth Antenna

NOTE: Due to a configuration change, the Azimuth antenna on MLS-01 is fixed in position and does not require deployment.

To deploy the Azimuth antenna on **MLS-00 ONLY**, perform steps 1 through 12 below.

WARNING: The Azimuth antenna is extremely heavy (over 200 pounds) and unwieldy. To prevent tipping, ensure that either the top or bottom of the antenna is secured at all times. Follow the steps below in the exact order they are presented. Failure to adhere to these instructions may result in severe injury if the antenna falls.

1. There are two upper guide plates and two anchor plates for the Azimuth antenna. The anchor plates are permanently mounted to the wall above the upper corners of the radome frame. The guide plates are rectangular (approximately 5" by 7") aluminum plates with a large, bullet-shaped, silver post extending from the top side and six, hex-head, bolts securing the plate to the top of the antenna. Remove five (5) of the bolts from each guide plate. Loosen, BUT DO NOT REMOVE the one (1) remaining hex-head bolt in each guide plate.

2. Remove the cover plate from over the Antenna pedestal pit. In the pedestal pit, the azimuth antenna pedestal and triangular leveling base are supported on three, ¾", threaded steel jacking rods. Ensure that one (1) jacking nut is installed on each jacking rod, then, install the pedestal and leveling plate on the jacking rods.

3. Using the jacking nuts under the antenna pedestal leveling plate, raise the top of antenna pedestal as close as possible to the height of the bottom of the Azimuth antenna.

4. In the stowed position, the Azimuth antenna is supported by two, steel, jacking plates that are mounted on ¾", threaded, steel jacking rods. Loosen the jacking nut under each of the jacking plates to lower the antenna so that the bottom of the antenna is even with the top of the pedestal. Tighten the nut on top of each jacking plate down securely against the plate, so that the plates will remain level as the antenna is shifted off of them.

5. Each jacking plate is attached to the bottom of the Azimuth antenna with four (4) hex-head bolts. Remove these bolts from each bracket.

WARNING: The Azimuth antenna is extremely heavy (over 200 pounds) and unwieldy. To prevent tipping, ensure that either the top or bottom of the antenna is secured at all times. The following step requires a minimum of two personnel. Failure to adhere to these instructions may result in death or severe injury if the antenna falls on personnel.

6. Carefully, shift base of the the antenna off of the jacking brackets and onto the antenna pedestal.
7. Slide the antenna to align one (1) of the ten (10) bolt holes in the antenna mounting pad over the corresponding hole on the mounting pad on top of the pedestal. Install a $^3/_8$" diameter, hex-head bolt through the holes in both mounting pads and secure it with a matching nut. Tighten this nut finger tight.
8. Shift the antenna on the pedestal mounting pad until the remaining mounting bolt holes align. Install the remaining nine (9) mounting bolts, and tighten all ten (10) bolts securely.
9. At the top of the antenna, remove the one (1) remaining mounting bolt from each of the antenna guide plates.

NOTE: To gain sufficient clearance to remove the antenna guide plates in the next step, it may be necessary to lower the Azimuth antenna, using the jacking nuts installed under the triangular, antenna-pedestal leveling plate, in the pedestal pit.

10. Remove the antenna guide plates, rotate them 180° horizontally, (so that the bullet-shaped, silver pin still points up, but the plate extends beyond the back on the antenna) and secure each plate to the top of the antenna with the 6 hex-head bolts removed previously.
11. Use the jacking bolts under the triangular, pedestal leveling base to level the antenna and raise it to the desired height.
12. Reinstall the cover plate over the antenna pedestal pit. **This completes the deployment procedure for the Azimuth antenna on MLS-00 ONLY.**

Install UPS for radiotelephone and FreeWave radios

The UPS for the radiotelephone and FreeWave radios is a standard, computer peripheral UPS. The power cords for the radiotelephone and FreeWave radios are connected to it with common, (120 volt AC) wall plugs.

Remove Circuit Board Covers (El & Az)

The metal covers on the circuit card trays of the EL and Az electronics should be removed to allow for adjustment and calibration of the systems.

Install Computer(s)

The communications cable from the local monitoring computer should be connected to the modem on the Az electronics rack. If desired, a second computer can be connected to the DME system.

Energize System

Energize the MLS system in the following order:

1. Turn on circuit breakers in the shelter circuit breaker panel.
2. Energize the Az system by performing steps 3 thru 6 in order.
3. Turn on circuit breakers on the front of the Power Supply.
4. Turn switch on the UPS battery box on, then off, then on again. (This resets the UPS to charge the battery pack.)
5. Turn on the system electronics, by setting the "On/Off" switch in the A1A1 circuit card rack to "On".
6. On the A1A1 card rack, place the "Test/Operate" switch to the "Test" position.
7. Repeat steps 3 thru 6 for the El system.
8. Repeat steps 3 and 4 for the DME system, then, turn on the system electronics, using the "On/Off" switch at the left side of the upper front panel on the electronics cabinet.

Perform Voltage Checks

Perform voltage checks on the Az and El UPS modules in accordance with Paragraph 2.6, of the manufacturer's *Operation and Maintenance Manual, Microwave Landing System, Angle Subsystem,* (Volume 1 of 4).

Perform System Alignment and Test

Perform Az and El Alignment and Test in accordance with Paragraph 2.10, of the manufacturer's *Operation and Maintenance Manual, Microwave Landing System, Angle Subsystem,* (Volume 1 of 4).

Level Shelter (Not applicable to MLS-00)

NOTE: The leveling operation requires a minimum of two technicians (one person to monitor the levels while the other person adjusts the leveling jacks). The technicians will require two-way radios to communicate effectively. The levels do not react immediately to movement of the structure. Move the leveling-jack hand wheel in small increments. (approximately $^1/_4$ turn or less) and allow approximately 20-30 seconds for the building to settle before determining the next adjustment.

Referring to the bubble levels on the Azimuth antenna, and using the leveling jacks at the rear corners of the leveling platform, level the shelter.

Boresight the Azimuth Antenna

NOTE: The Azimuth boresighting operation requires a minimum of two technicians equipped with two-way radios (one person to monitor the Portable Measurement Receiver (PMR) at the runway threshold while the other person pivots the MLS shelter on the leveling platform).

Using the Portable Measurement Receiver (PMR) align the Azimuth antenna's zero axis parallel with the runway centerline. This is accomplished by setting the PMR antenna at the antenna boresight point at the Runway Threshold (previously identified and flagged by the McMurdo Surveyor,) and then pivoting the MLS shelter on the sled until the PMR indicates a 0.00 degree Azimuth reading.

Level Elevation Antenna

Referring to the bubble levels mounted on the Elevation Antenna, and using the leveling nuts below the Antenna's Pedestal base, level the antenna.

Perform Electronic Alignment of the MLS

Perform Alignment Procedures on the Az and El MLS subsystems in accordance with Section IV of the manufacturer's *Operation and Maintenance Manual, Microwave Landing System, Angle Subsystem,* (Volume 1 of 4).

Install & Connect FreeWave radios

IT/Comms personnel will install and connect the FreeWave radios and aim the antennas used to link the MLS system to the airfield control tower and to the McMurdo Intranet. The Lead MLS Technician is responsible for coordinating IT/Comms support for this activity.

Install RCSU in Control Tower

IT/Comms personnel will install a FreeWave radio in the airfield control tower and aim the antenna used to link the MLS system to the Remote Control Status Unit in the control tower. MLS technicians will be present to install the Remote Control Status Unit. The MLS technicians will also supply and install a UPS for use with the RCSU and the FreeWave radio. The Lead MLS Technician is responsible for coordinating IT/Comms support for this activity.

Install Telepoint radiotelephones and antenna

IT/Comms personnel will install a Telepoint radiotelephone inside the MLS shelter, and a suitable exterior antenna on the outside of the shelter. MLS technicians will be on-hand to assist in installing the antenna and the connecting cable as required. The Lead MLS Technician is responsible for coordinating IT/Comms support for this activity.

Install Internet connectivity

IT/Comms personnel will perform the necessary actions to connect the MLS monitoring system to the McMurdo Intranet at the McMurdo T-Site communications hub, via FreeWave radio link. The Lead MLS Technician is responsible for coordinating IT/Comms support for this activity.

Decommissioning Procedures

Decommissioning procedures consist of shutting down the MLS electronic equipment, stowing components such as antennas, disconnecting the MLS Shelter from the Generator Shelter, and preparing both shelters for winter storage.

NOTE: To avoid unnecessary complications, the first six steps of this list should be performed in the order listed.

MLS SHELTER

1. Notify Airfield Tower that MLS is being taken out of service. Giving the controllers advance notice will allow them to publish a NOTAM listing the system as "out of service", and possibly avoid unnecessary calls to the duty technician.
2. Turn off RCSU in Tower. This will avoid an unnecessary alarm in the Tower when the system is taken off-line.
3. Shut off the FreeWave radios. The radios serve to transmit the current system status to the remote monitoring system and to send an alarm to the tower when the system goes down. Shutting them off will prevent unnecessary pages to the duty technician.
4. Shut off MLS and DME back-up batteries using the switch on the outside of each battery case. This will prevent the MLS and DME systems from switching to back-up power when the line (AC) voltage is shut off.
5. Shut off MLS and DME line (AC) voltage, using power switch on each MLS and DME uninterruptible power supply (UPS). This will take the MLS and DME systems off line.
6. Disconnect back-up batteries and remove for storage. Doing this step now will allow access to the battery cases while floor space within the MLS shelter is relatively uncluttered.

While the remaining steps are listed in a relatively logical order, they may be performed out-of-sequence, as conditions (e.g. time, manpower, transportation, weather, etc.) dictate.

- Ensure all MLS circuit card covers are properly installed and secured. This will keep the cards securely in the card racks during transit.
- Disconnect and stow the Far Field Monitor cable. This will ensure that the cable is out of the way for later exterior work.

WARNING: The mast is extremely heavy (Over 100 pounds.) At least three people should be on-hand to lower the mast. Failure to follow this precaution may result in serious injury or death if the mast falls on personnel.

- Lower the Far Field Monitor mast.

While one person supports the mast, disconnect one of the three mast guy wires by unscrewing the turnbuckle, then carefully tip the mast away from the disconnected guy wire and lay it down on the snow or ice surface.

NOTE: For ease of access during remaining steps, delay stowing the mast until all interior preparations are complete.)

CAUTION: The small radome over the FFM antenna is fragile. Store the antenna in a manner that protects the radome from impact.

- Remove and store FFM Antenna and rigid coax.
- Remove and store computer(s) in a "Do-Not-Freeze" (DNF) environment
- Remove and store the computer UPS.
- Remove and store (DNF) all test equipment—(Oscilloscope, Power Meter, Volt meter, Portable Monitoring Receiver and Frequency counter).

WARNING: The elevation antenna is extremely heavy (over 200 pounds) and unwieldy. To prevent tipping, ensure that either the top or bottom of the antenna is secured at all times. Follow the steps listed below in the exact order they are presented. Failure to adhere to these instructions may result in severe injury if the antenna falls.

- Stow and secure Elevation antenna

NOTE:

Due to a configuration change, stowage instructions for the Elevation Antenna differ between MLS-00 and MLS-01. To stow the MLS-00 Elevation Antenna, follow steps 1 through 10 below. To stow MLS-01 Elevation Antenna, skip steps 1 through 10 and proceed to step ll.

The jacking and leveling nuts, installed on the threaded rods that support the antenna base, will require either a 1 1/8" or 1¼" open-end wrench. Have both on-hand before beginning this operation.

To stow the Elevation Antenna, perform the following steps in the order listed.

1. There is a guide plate secured to the top of the radome frame. **On MLS-00 ONLY - t**wo, bullet-shaped, silver posts extend downward from the guide plate. At the bottom of the antenna pedestal, loosen the three nuts above the antenna pedestal base. Using the jacking nuts under the pedestal base, tilt the top of the antenna toward the radome slightly, then raise the entire antenna until the bullet-shaped, silver posts engage the corresponding holes in the bracket at the top of the antenna and extend approximately ½" beyond the bottom of the bracket.
2. **On MLS-00 ONLY -** A black, steel jacking plate is mounted between the antenna pedestal and the radome. Each end of the plate is supported on a ¾" diameter, threaded jacking rod. After the antenna top bracket has engaged the silver posts on the upper guide plate, raise the antenna jacking plate, by alternately loosening the nuts on top of the plate and tightening the jacking nuts under the plate, until the top of the plate is even with the bottom of the antenna. Tighten the nuts above and below the jacking plate, so that it will remain level when the weight of the antenna is transferred onto it.
3. **On MLS-00 ONLY -** Remove the six (6) bolts (two on each side and two inside the pedestal column) securing the antenna to the pedestal.
4. **On MLS-00 ONLY -** At the bottom of the antenna, there are two, black, "L-shaped", flange brackets bolted onto the sides. Carefully shift the antenna onto the jacking plate until one of the holes in the bracket aligns with the corresponding threaded hole in the jacking plate. Install a ¼" hex-head bolt through the flange bracket and into the jacking plate, and then tighten it "finger-tight".
5. **On MLS-00 ONLY -** Carefully shift the antenna until the remaining three holes in the flange brackets align with the corresponding holes in the jacking plate. Install ¼" hex-head bolts in each of the three remaining holes. Tighten all four bolts at this time.
6. **On MLS-00 ONLY -** The antenna pedestal is attached to a triangular, aluminum base plate, by three, ¾", threaded, jacking rods. On each rod, remove the nut located just above the base plat. Then, lift the pedestal and base plate out of the pedestal well. Reinstall the nuts onto the jacking rods for future reuse.
7. **On MLS-00 ONLY -** Install cover plates over the antenna pedestal well.

8. **On MLS-00 ONLY -** Using the jacking plate, raise the antenna until the top bracket is snug against the upper guide plate.
9. **On MLS-00 ONLY -** Using two (2) ½" diameter by 1½" long, hex-head bolts; secure the antenna upper bracket, through the upper guide plate, to the radome frame.

CAUTION: On MLS-00 Only, the ½" by 1½" hex-head bolts must extend through the upper guide plate and fully engage the threaded holes in the radome frame. Failure to follow this instruction may allow the antenna to break loose during transit, resulting in severe damage to the antenna.

10. **On MLS-00 ONLY -** On the antenna jacking plate (at the bottom of the antenna) tighten the two lower jacking nuts securely against the bottom of the plate. Then, securely tighten the two top nuts.
11. **On MLS-01 –** The leveling plate at the bottom of the antenna pedestal is supported on three, ¾", threaded jacking rods. On each jacking rod, loosen the nut above the leveling plate, then, use the jacking nuts under the leveling plate to tilt the top of the antenna towards the radome. (This will align the holes in the antenna top bracket for installation of the antenna guide pins in the next step.)

NOTE: On MLS-01, because of limited clearance between the antenna guide plate and the bracket at the top of the antenna, the two, bullet-shaped, silver posts mentioned in the next step were removed and stored during MLS commissioning.

12. **On MLS-01 -** Locate the two, bullet-shaped, silver posts removed during commissioning and install them on the guide bracket fastened at the top of the elevation antenna radome. Due to limited space, it will probably be necessary to pass the flat end of each post upwards through the matching hole on the bracket fastened to the top of the antenna, then thread the post onto the stud extending from the upper guide bracket. (To securely fasten the posts, it will be necessary to turn them using a vise-grip pliers. This will result in some unavoidable marring of the finish on the post.)
13. **On MLS-01 –** Use the three jacking nuts under the triangular leveling plate to raise the antenna until the bracket mounted on top of the antenna travels up the bullet-shaped, silver, guide posts and seats firmly against the guide plate secured to the top of the antenna radome frame.
14. **On MLS-01 -** Using two (2) ½" diameter by 1" long, hex-head bolts; secure the antenna upper bracket to the upper guide plate.
15. **On MLS-01 -** At the triangular leveling plate mounted at the bottom of the antenna pedestal, tighten the three jacking nuts under the plate snugly. Then, tighten the three nuts on top of the plate. **This completes the Elevation antenna stowage procedure for MLS -01.**

- Stow and secure Az antenna

NOTE: Due to a configuration change, the Azimuth antenna on MLS-01 is fixed in position and does not require stowage.

To deploy the Azimuth antenna on **MLS-00 ONLY**, perform steps 1 through 11 below.

WARNING: The Azimuth antenna is extremely heavy (over 200 pounds) and unwieldy. To prevent tipping, ensure that either the top or bottom of the antenna is secured at all times. Follow the steps below in the exact order they are presented. Failure to adhere to these instructions may result in severe injury if the antenna falls.

To stow the MLS-00 Azimuth Antenna, perform the following steps in the order listed.

1. There are two upper guide plates and two anchor plates for the Azimuth antenna. The anchor plates are permanently mounted to the wall above the upper corners of the radome frame. The guide plates are rectangular (approximately 5" by 7") aluminum plates with a large, bullet-shaped, silver post extending from the top side and six, elongated holes machined parallel to the long axis of the plate. Install one upper guide plate on top of each top corner of the Azimuth antenna, by inserting the bullet-shaped, silver post through the matching hole in the anchor bracket.

NOTE: It may be necessary to lower the Azimuth antenna in order to get the bullet-shaped, silver posts on the guide brackets into and through the matching holes in the anchor brackets. If necessary, use the jacking nuts under the antenna pedestal base to lower the antenna.

2. Temporarily secure the guide plate by installing one (1) ¼" hex-head bolt through one of the elongated holes in the guide plate and down into the corresponding, threaded hole in the top of the antenna. This bolt should be tightened just "finger-tight" so that the guide plate is free to pivot, as necessary, in subsequent steps.
3. Use the jacking bolts under the antenna pedestal base to raise the antenna until the silver posts of both guide brackets extend through and approximately ½" above the anchor brackets.
4. There are two, black, U-shaped, metal, jacking brackets under the Azimuth antenna. Each jacking bracket is secured by a pair of nuts (one above, one below) on a ¾" threaded rod. After the antenna guide plates have been inserted into the anchor brackets

and temporarily secured with ¼" hex-head bolts, raise the jacking brackets until they are snug against the bottom of the antenna frame. Snug the nuts above and below the jacking brackets, so that the brackets will remain level when the weight of the antenna is transferred onto them.

NOTE: To provide adjustment necessary for the next step, snug the nuts above and below the jacking brackets just enough to keep them level, but loose enough so that the jacking plates can still be rotated.

5. Remove the ten (10) 3/8" hex-head bolts securing the Azimuth antenna to the pedestal.
6. Secure each jacking bracket to the antenna by installing one (1) ¼" hex-head bolt, through one of the holes in the jacking bracket and into the corresponding threaded hole in the bottom of the antenna frame.

NOTE: It may be necessary to carefully shift the antenna laterally on the mounting pedestal in order to align the hole in the jacking bracket with the corresponding hole in the bottom of the antenna frame. This will require a minimum of two people to accomplish. Install one (1) ¼" hex-head bolt through each of the jacking plates and snug it "finger-tight".

7. After one ¼" hex-head bolt has been installed through each jacking bracket and snugged into the antenna frame, carefully shift the antenna, from the pedestal onto the jacking brackets, until the other three holes in the first bracket line up with their respective threaded holes in the antenna frame. Install the three remaining ¼" bolts through these holes, snug them finger-tight, and then repeat the procedure with the other jacking bracket. Tighten all eight (8) bolts securely at this time.
8. On top of the antenna, swivel each of the guide plates until the remaining elongated holes align with their respective threaded holes in the top of the antenna. Install the remaining, ten (10), ¼" hex-head bolts through these holes and securely tighten all six (6) bolts on each plate.
9. Loosen the nuts above the jacking brackets, then, use the nuts below the brackets to raise the antenna until the guide plates are firmly seated against the anchor plates.
10. Remove the three nuts above the antenna pedestal base and lift the pedestal and base out of the pedestal well. Reinstall the nuts onto the threaded jacking rods for future use.
11. Install the cover plate over the antenna pedestal well. **This completes the stowage procedure for the Azimuth antenna on MLS-00 ONLY.**

- Seal the joint between the antenna pedestal wells and the well cover plates to prevent snow intrusion.

- Disconnect the coaxial cable at the base of the DME antenna, thread the cable through the wall back into the shelter and seal the wall penetration to prevent snow intrusion.

- Remove and stow the DME antenna (Requires AGE man lift or similar platform)

WARNING: the antenna is top-heavy. The rope or strap used to secured the antenna to the man lift must be secured to the antenna above the antenna center-point (more than five (5) feet above the base of the antenna). Failure to adhere to this instruction may cause severe injury to the man lift operator or nearby personnel if the antenna tips and/or falls.

1. Use a rope or strap, attached through the aluminum ring at the base of the antenna, and secured to the antenna at a point above the center of balance, to secure the antenna to the man lift.
2. After securing the DME antenna to the man lift, remove the six bolts securing the antenna to the antenna base.
3. Use the man lift to lift the antenna off of its base and lower it to the ground.

- Remove and store excess equipment and spare parts
- Remove and store ice auger battery
- Secure drawers, shelves, and hangers
- Remove and store fire extinguishers
- Cover radomes to prevent snow abrasion
- Seal HVAC vents
- Disassemble and stow Far Field Monitor mast
- Seal Door

WARNING: The stairs are extremely heavy. A minimum of three people are required to safely retract and secure them. Failure to adhere to this requirement may result in serious injury or death if the stairs fall and strike an individual while being retracted.

- Retract Stairs
- Secure shelter to sled

To secure the shelter to the sled for transport, perform the following steps:

CAUTION: Do not overtighten the first cargo chain installed. The first chain applied will put pressure on the rack and pinion mechanism on the end of the MLS shelter opposite from the stairs. Placing excessive pressure on the rack and pinion may cause serious damage to the mechanism.

NOTE: Cargo chains and chain binders for this operation may normally be obtained from Fleet Operations.

1. On the radome side of the MLS shelter, extend the two, pad-equipped, screw jacks until they are snug against the leveling platform.
2. On one end of the shelter, fasten a cargo chain to a suitable anchor point on the sled leveling platform and run it diagonally (across the end) to a suitable anchor point on the shelter frame. Use a chain binder to take up the slack in the installed chain.
3. On the same end of the sled, install another cargo chain (from leveling platform to shelter frame) along the opposite diagonal, so that the two chains form an "X" pattern.
4. At the rack and pinion mechanism (on the end of the shelter opposite from the stairs) attempt to turn the hand wheel in each direction, to relieve any pressure applied on the mechanism by the first two cargo chains.

NOTE: the cargo chains and chain binders should be returned to Fleet Operations, after the sled is positioned on the storage berm.

5. Repeat steps 2 and 3 on the remaining end and both sides of the shelter.

- Disconnect power umbilical.
- Energize Ski Heat Trace to free skis (as necessary).
- Secure ski power cords.

MLS GENERATOR

- Shut down the generator

NOTE: Before attempting to shut down the generator, ensure that the "Auto Start/Hand Start" switches (mounted on the wall, to the left of the Automatic Transfer Switch) are in the "Hand Start" position. If the switches are left in the "Auto Start" position, the Automatic Transfer Switch will attempt to restart the generator engine and (depending upon current settings) may start the other generator as well.

On top of each generator, at the end closest to the shelter door, there is a black metal control box. On each control box, on the narrow end facing the shelter door, there is a rocker switch encased in a black, rubber cover. The two positions of the rocker switch are labeled "Start" and "Stop". To shut down the generator, press and hold the "Stop" button until the engine has come to a full stop.

- Remove and stow umbilical cable

CAUTION: The fuel tank on MLS-01 is not certified for transport with fuel in the tank. The tank must be completely drained before the generator sled is moved. Failure to observe this precaution may result in severe damage to the fuel tank, spilled fuel, and serious ecological contamination.

- Drain fuel tank
- Disconnect and remove batteries for storage
- Seal Engine Cooling-Air intakes
- Seal HVAC vents
- Seal exhaust stacks
- Remove and store fire extinguisher
- Seal door
- Retract stairs

WARNING: The stairs are extremely heavy. A minimum of three people are required to safely retract and secure them. Failure to adhere to this requirement may result in serious injury or death if the stairs fall and strike an individual while being retracted.

Records

None.

Attachments, Appendices

None.