PROJECT ICECUBE
COMPREHENSIVE ENVIRONMENTAL EVALUATION

FINAL DRAFT

National Science Foundation
4201 Wilson Boulevard
Arlington, Virginia 22230

January 15, 2004

PROJECT ICECUBE
COMPREHENSIVE ENVIRONMENTAL EVALUATION
FINAL DRAFT

TABLE OF CONTENTS

1.0 INTRODUCTION 1-1
1.1 Purpose 1-1
1.2 Comprehensive Environmental Evaluation (CEE) Process 1-1
1.3 Document Organization 1-2
2.0 SUMMARY OF PROPOSED ACTION AND OPTIONS 2-1
2.1 Introduction 2-1
2.2 Alternative A – Conduct Project IceCube 2-1
2.2.1 Option A1 – Support Project IceCube Primarily with Amundsen-Scott Station Resources 2-2
2.2.2 Option A2 – Delay the Initiation of Project IceCube Until the Completion of SPSM 2-2
2.2.3 Option A3 – Support Project IceCube Using Resources Independent of Amundsen-Scott Station Facilities 2-2
2.3 Alternative B - Do Not Conduct Project IceCube (No Action Alternative) 2-3
2.4 Alternatives Not Considered 2-3
2.4.1 Operate Project IceCube With a Modified Design 2-3
2.4.2 Install and Operate Project IceCube Using Modified Operations and Logistical Support. 2-3
2.4.3 Install and Operate Project IceCube at a Location Other than the South Pole 2-3
2.4.4 Support Project IceCube Using Other Transportation Mechanisms to Deliver Project Materials to the South Pole 2-4
3.0 DESCRIPTION OF PROPOSED ACTIVITIES 3-1
3.1 Introduction 3-1
3.2 Purpose and Need 3-1
3.3 Description of Project IceCube 3-3
3.3.1 Scientific Instrumentation 3-3
3.3.1.1 Overview of Components and Locations 3-3
3.3.1.1.1 Optical Sensor 3-6
3.3.1.1.2 HV Power Supply 3-6
3.3.1.1.3 Flasher Board 3-6
3.3.1.1.4 Pressure Housing 3-7
3.3.1.2 Deep Array 3-7
3.3.1.3 Surface Array 3-7
3.3.1.4 Counting House, Cable and System Connections 3-9
3.3.2 Drilling and Array Deployment 3-10
3.3.2.1 Overview of Drilling Systems and Locations 3-10
3.3.2.1.1 Tower Operations Site 3-14
3.3.2.1.1.1 Tower Operations Structures (TOS) 3-14
3.3.2.1.1.2 Tower Operations Workshop (TOW) 3-14
3.3.2.1.1.3 Reels, Hoses and Cables 3-14
3.3.2.1.1.4 Firn Drill 3-17
3.3.2.1.1.5 Drill Head Assembly 3-17
3.3.2.1.2 Seasonal Equipment Site 3-19
3.3.2.1.2.1 Rodriguez Well System 3-21
3.3.2.1.2.2 Water Tank No. 1 3-23
3.3.2.1.2.3 Pre-Heat System 3-23
3.3.2.1.2.4 Water Tank No. 2 3-23

3.3.2.1.2.5 High Pressure Pumps 3-23
3.3.2.1.2.6 Main Heat Plant 3-23
3.3.2.1.2.7 Seasonal Equipment Workshop 3-25
3.3.2.1.2.8 Optical Module Lab 3-25
3.3.2.1.2.9 Drill Control Center 3-25
3.3.2.1.2.10 Generators 3-25
3.3.2.1.2.11 Milvans (Storage) 3-25
3.3.2.1.2.12 Fuel Storage and Distribution System 3-25
3.3.2.2 Drilling Activities 3-28
3.3.2.3 Array Deployment 3-31
3.3.2.4 Surface Cable Installation 3-31
3.3.3 Data Management 3-32
3.4 Nature and Intensity of Proposed Activities 3-32
3.4.1 Drilling and Array Deployment 3-33
3.4.2 Science Support Activities 3-33
3.4.2.1 Operation of Dedicated Facilities 3-33
3.4.2.2 Power Generation 3-34
3.4.2.3 Information Technology 3-34
3.4.2.4 Communications and Data Transfer 3-35
3.4.3 Personnel Support Activities 3-35
3.4.4 Logistics Support – Transportation to the South Pole 3-35
3.4.4.1 Delivery of Project Materials to McMurdo Station via Vessels, C-141 Aircraft 3-36
3.4.4.2 Delivery of Project Materials to the South Pole via LC-130 Aircraft 3-36
3.4.4.3 Delivery of Project Materials to the South Pole via Overland Traverse 3-36
3.4.5 Logistics Support – Equipment and Services 3-37
3.4.5.1 Heavy Equipment 3-37
3.4.5.2 Vehicles 3-37
3.4.5.3 Other 3-37
3.4.6 Fuel Management 3-37
3.4.6.1 Fuel Delivery 3-38
3.4.6.2 Fuel Storage 3-38
3.4.6.3 Fuel Use 3-39
3.4.7 Materials Management 3-39
3.4.8 Waste Management 3-40
3.4.8.1 Solid Waste 3-40
3.4.8.2 Hazardous Waste 3-40
3.4.8.3 Wastewater 3-41
3.4.8.4 Emergency Response 3-42
3.4.8.5 Safety Program and Code Compliance Inspections 3-42
3.4.8.6 Annual Setup and Seasonal Shutdown 3-42
4.0 AFFECTED ENVIRONMENT (INITIAL ENVIRONMENTAL STATE) 4-1
4.1 Introduction 4-1
4.2 Description of the Environment at the South Pole 4-1
4.2.1 Weather and Climate 4-1
4.2.2 Terrestrial Ice and Snow 4-2
4.2.3 Terrestrial Biota 4-2
4.3 Description of the Amundsen-Scott Station Infrastructure and Operations 4-2
4.3.1 Facilities 4-5
4.3.2 Power 4-8
4.3.3 Water 4-8
4.3.4 Information Technology 4-10

4.3.5 Communications and Data Transfer....4-10
4.3.6 Berthing....4-11
4.3.7 Food Services....4-11
4.3.8 Transportation Logistics....4-11
4.3.9 Operations Logistics – Equipment and Services....4-12
4.3.10 Fuel Management....4-13
4.3.11 Materials Management....4-14
4.3.12 Waste Management....4-15
4.3.13 Emergency Services....4-18
4.4 Description of the Scientific Research Projects at the South Pole....4-18
5.0 DESCRIPTION OF ENVIRONMENTAL IMPACTS....5-1
5.1 Introduction....5-1
5.2 Methodology and Data Sources....5-1
5.2.1 Physical Disturbance to Snow/Ice Environment....5-2
5.2.2 Air Emissions....5-2
5.2.3 Releases to the Snow/Ice Environment....5-2
5.2.4 Impacts to Amundsen-Scott Station Operations....5-2
5.2.5 Impacts to Science at the South Pole....5-3
5.2.6 Impacts to Other Science in the USAP....5-3
5.2.7 Second Order and Cumulative Impacts....5-3
5.3 Environmental Impacts....5-3
5.3.1 Physical Disturbance to Snow/Ice Environment....5-4
5.3.2 Air Emissions....5-5
5.3.2.1 Air Emissions from Land-Based Equipment....5-5
5.3.2.2 Air Emissions from Aircraft....5-9
5.3.3 Releases to Snow/Ice Environment....5-10
5.3.3.1 Array Components....5-10
5.3.3.2 Wastewater Discharge....5-11
5.3.3.3 Other Materials....5-13
5.3.3.4 Accidental Releases....5-13
5.3.4 Impacts to Amundsen-Scott Station Operations....5-14
5.3.5 Impacts to Science at the South Pole....5-17
5.3.6 Impacts to Other Science in the USAP....5-17
5.3.7 Indirect or Second Order Impacts....5-18
5.3.8 Cumulative Impacts....5-18
5.3.9 Unavoidable Impacts....5-19
5.4 Summary of Impacts....5-19
6.0 MITIGATION OF ENVIRONMENTAL IMPACTS AND MONITORING....6-26
6.1 Introduction....6-26
6.2 Mitigating Measures....6-26
6.3 Environmental Reporting and Review....6-5
7.0 GAPS IN KNOWLEDGE AND UNCERTAINTIES....7-1
7.1 Introduction....7-1
7.2 Scientific Approach....7-1
7.3 Drilling and Array Deployment....7-1
7.4 Operation of the Telescope....7-2
7.5 Data Management....7-2
8.0 CONCLUSIONS....8-1
8.1 Introduction....8-1
8.2 Physical Disturbances to the Snow/Ice Environment....8-1
8.3 Air Emissions....8-1

8.4 Releases to Snow/Ice Environment 8-2
8.5 Impacts to Amundsen-Scott Station Operations 8-2
8.6 Impacts to Science at the South Pole 8-2
8.7 Impacts to Other Science in the USAP 8-3
8.8 Summary 8-3
9.0 NONTECHNICAL SUMMARY 8-1
10.0 REFERENCES 9-1
11.0 APPENDICES 10-1
Appendix A Amundsen-Scott Station Wastewater Characteristics
Appendix B Air Emissions from Fuel Combustion Sources at the South Pole
Appendix C Air Emissions from Fuel Evaporation at the South Pole
Appendix D Air Emissions from Logistical Support Aircraft

LIST OF TABLES

Table 3-1. Summary of Drilling and Array Deployment Activities During Project IceCube.....3-33
Table 3-2. Project IceCube Staffing Plan.....3-35
Table 3-3. Estimated Logistics Support Requirements for Project IceCube.....3-36
Table 3-4. Estimated Fuel Consumption for Project IceCube 3-38
Table 3-5. Projected Waste Generation for Project IceCube 3-40
Table 3-6. Projected Water Use by Project IceCube Personnel.....3-41
Table 4-1. Amundsen-Scott Station Facilities 4-5
Table 4-2. Amundsen-Scott Station Staffing Plan 4-8
Table 4-3. Estimated Water Use at the Amundsen-Scott Station 4-10
Table 4-4. Estimated Logistical Support Requirements for the Amundsen-Scott Station.....4-11
Table 4-5. Amundsen-Scott Station Equipment and Vehicles.....4-12
Table 4-6. Estimated Fuel Consumption at the Amundsen-Scott Station.....4-14
Table 4-7. Estimated Wastewater Discharge and Pollutant Loadings at the Amundsen-Scott Station .4-18
Table 4-8. Research Projects Conducted at the South Pole During the 2002-2003 Season.....4-19
Table 4-9. Amundsen-Scott Station Remote Science Sectors 4-20
Table 5-1. Estimated Fuel Consumption at the Amundsen-Scott Station During Project IceCube.....5-6
Table 5-2. Air Emissions From Land-Based Fuel Combustion Sources at the South Pole During Project IceCube 5-7
Table 5-3. Summary of Fuel Evaporative Emissions During Project IceCube (all fuels) 5-8
Table 5-4. Air Emissions from Aircraft Supporting Activities at the Amundsen-Scott Station 5-9
Table 5-5. Project IceCube Array Components Released to the Environment.....5-10
Table 5-6. Wastewater Discharge Based on Population at the South Pole During Project IceCube 5-11
Table 5-7. Projected Wastewater Pollutant Loadings at the South Pole During Project IceCube 5-12
Table 5-8. Summary of Spills at the Amundsen-Scott Station (March 2002 - February 2003).....5-14
Table 5-9. Estimated Population at the South Pole During Project IceCube.....5-15
Table 5-10. Estimated Number of Logistics Support Flights to the South Pole During Project IceCube 5-16
Table 5-11. Estimated Annual Waste Generation During Project IceCube.....5-16
Table 5-12. Criteria for Assessment of Potential Impacts on the Environment.....5-19
Table 5-13. Summary of Environmental and Operational Impacts from Project IceCube 5-21
Table 6-1. Summary of Mitigating Measures 6-1

LIST OF FIGURES

Figure 3-1. Proposed Location of Project IceCube Array....3-4
Figure 3-2. Deep and Surface Array Profile....3-5
Figure 3-3. Digital Optical Module (DOM) Schematic....3-6
Figure 3-4. Digital Optical Module (DOM) and Harness....3-8
Figure 3-5. IceTop Tanks....3-9
Figure 3-6. String Configuration and Deep Array, IceTop, and Counting House....3-10
Figure 3-7. Enhanced Hot Water Drill Layout....3-12
Figure 3-8. Enhanced Hot Water Drill Schematic....3-13
Figure 3-9. Tower Operations Site Layout....3-15
Figure 3-10. Supply Hose Reel Rendering....3-16
Figure 3-11. Firn Drill Rendering....3-17
Figure 3-12. Drill Head Assembly....3-18
Figure 3-13. Seasonal Equipment Site Layout....3-20
Figure 3-14. Rodriguez Well System Floor Plan....3-22
Figure 3-15. Main Heat Plant Floor Plan....3-24
Figure 3-16. Seasonal Equipment Site Fuel Storage and Distribution....3-27
Figure 3-17. Project IceCube Array Pattern....3-29
Figure 3-18. Typical TOS Operations....3-30
Figure 3-19. Elevated Dorm....3-34
Figure 4-1. South Pole Wind Rose....4-2
Figure 4-2. Amundsen-Scott Station Site Plan....4-4
Figure 4-3. Typical Rodriguez Well at the Amundsen-Scott Station....4-9
Figure 4-4. Rodriguez Well and Sewage Bulb Use Plan for the Amundsen-Scott Station....4-17

PROJECT ICECUBE
COMPREHENSIVE ENVIRONMENTAL EVALUATION
FINAL DRAFT

1.0 INTRODUCTION

1.1 Purpose

This Comprehensive Environmental Evaluation (CEE) has been prepared by the Director of the Office of Polar Programs (OPP) of the National Science Foundation (NSF) to enable the decision to construct and operate a high-energy neutrino telescope at the South Pole (i.e., the proposed action). The NSF manages and funds United States activities in Antarctica, and is responsible for the U.S. Antarctic Research Program (USAP) as well as operation of three active U.S. research stations in Antarctica, including the Amundsen-Scott South Pole Station.

This CEE contains information to permit informed consideration of the reasonably foreseeable potential environmental effects of the proposed action and possible alternatives to that proposed action.

1.2 Comprehensive Environmental Evaluation (CEE) Process

Proposed USAP actions in Antarctica are subject to the environmental impact assessment requirements of Annex I, Article 3 of the Protocol on Environmental Protection to the Antarctic Treaty, *Environmental Impact Assessment*, and the implementing regulations in the United States, *Environmental Assessment Procedures for National Science Foundation Actions in Antarctica* (45 CFR §641). These requirements specify that, for actions expected to have a more than minor or transitory impact on the Antarctic environment, a Comprehensive Environmental Evaluation (CEE) will be prepared.

In making this determination, the NSF must consider whether and to what degree the proposed action:

- Has the potential to adversely affect the Antarctic environment;
- May adversely affect climate and weather patterns;
- May adversely affect air or water quality;
- May affect atmospheric, terrestrial (including aquatic), glacial or marine environments;
- May detrimentally affect the distribution, abundance or productivity or species, or populations of species of fauna and flora;
- May further jeopardize endangered or threatened species or populations of such species;
- May degrade, or pose substantial risk to, areas of biological, scientific, historic, aesthetic or wilderness significance;
- Has highly uncertain environmental effects, or involves unique or unknown environmental risks; or
- Together with other actions, the effects of any one of which is individually insignificant, may have at least minor or transitory cumulative environmental effects.

Based on the preliminary environmental review of the proposed action with the above criteria, NSF has determined that the construction of a high-energy neutrino telescope at the South Pole may have a more than minor or transitory impact on the Antarctic environment, and has prepared this CEE accordingly. This CEE is consistent with the Protocol and U.S. implementing regulations including §641.18(b) which states that a CEE shall be a concise and analytical document, prepared in accordance with the range of

relevant issues identified in the scoping process. It shall contain sufficient information to permit informed consideration of the reasonably foreseeable potential environmental effects of a proposed action and possible alternatives to that proposed action. Such information shall include the following:

(1) A description of the proposed action including its purpose, location, duration and intensity;
(2) A description of the initial base-line environmental state with which predicted changes are to be compared, and a prediction of the future environmental state in the absence of the proposed action;
(3) A description of the methods and data used to forecast the potential impacts of the proposed action;
(4) An estimate of the nature, extent, duration and intensity of the likely direct potential impacts of the proposed action;
(5) A consideration of the potential indirect or second order impacts from the proposed action;
(6) A consideration of potential cumulative impacts of the proposed action in light of existing activities and other known planned actions and available information on those actions;
(7) A description of possible alternatives to the proposed action, including the alternative of not proceeding, and the potential consequences of those alternatives, in sufficient detail to allow a clear basis for choice among the alternatives and the proposed action;
(8) Identification of measures, including monitoring, that could be employed to minimize, mitigate or prevent potential impacts of the proposed action, detect unforeseen impacts, provide early warning of any adverse effects, and carry out prompt and effective response to accidents;
(9) Identification of unavoidable potential impacts of the proposed action;
(10) Consideration of the potential effects of the proposed action on the conduct of scientific research and on other existing uses and values;
(11) Identification of gaps in knowledge and uncertainties encountered in compiling the information required by this paragraph (b);
(12) A nontechnical summary of the information included in the CEE; and
(13) The name and address of the person and/or organization which prepared the CEE, and the address to which comments thereon should be directed.

Where possible, the procedures and evaluation criteria described in the *Guidelines for Environmental Impact Assessment in Antarctica* (reference 1) were also used in the preparation of this CEE. In addition, this document has been prepared consistent with the policies of the National Environmental Policy Act (NEPA) described in 40 CFR §1500-1508 and with National Science Foundation's implementing regulations for NEPA contained in 45 CFR §640. Applicability to NEPA is further defined by 45 CFR §641.14(e), which states that a CEE shall serve as an Environmental Impact Statement for purposes of the Executive Order 12114*, Environmental Effects Abroad of Major Federal Actions* (44 FR 1957).

1.3 Document Organization

Chapter 2.0 of this Comprehensive Environmental Evaluation provides a summary of the proposed action, available options, and possible alternatives. Chapter 3.0 describes the purpose and need of the proposed action and provides a detailed description of Project IceCube including a thorough discussion of the nature and intensity of the proposed action. Chapter 4.0 describes the affected environment at the South Pole (i.e., initial environmental state) and a prediction of the future environmental state in the absence of the proposed action.

Chapter 5.0 provides a detailed description of potential environmental impacts caused by Project IceCube including:

- A description of the methods and data used to forecast the potential impacts of the proposed action (§641.18(b)(3))
- Consideration of the potential effects of the proposed action on the conduct of scientific research and on other existing uses and values (§641.18(b)(10))
- Consideration of the potential indirect or second order impacts from the proposed action (§641.18(b)(5))
- Consideration of potential cumulative impacts of the proposed action in light of existing activities and other known planned actions and available information on those actions (§641.18(b)(6))
- Identification of unavoidable potential impacts of the proposed action(§641.18(b)(9))

Chapter 6.0 of the CEE identifies mitigating measures, including monitoring, that could be employed to minimize, mitigate or prevent potential impacts of the proposed action, detect unforeseen impacts, provide early warning of any adverse effects, and carry out prompt and effective response to accidents. Chapter 7.0 identifies gaps in knowledge and uncertainties encountered in compiling the information presented in the CEE.

Chapter 8.0 summarizes the conclusions derived from the Comprehensive Environmental Evaluation of Project IceCube. Section 9.0 contains a nontechnical summary of the information included in this CEE and provides the name and address of the person and/or organization which prepared the CEE and who will address comments. Chapter 10.0 provides references to information and other documents used to prepare the CEE, and Chapter 11.0 includes appendices containing data that were used in the development of this CEE.

2.0 SUMMARY OF PROPOSED ACTION AND OPTIONS

2.1 Introduction

This chapter of the Comprehensive Environmental Evaluation describes the proposed action and various options pertaining to the construction and operation of the high-energy neutrino telescope at the South Pole. This chapter also describes the no action alternative and identifies the alternatives that were not considered and eliminated from detailed analysis.

A neutrino telescope is designed to detect subatomic particles (i.e., neutrinos) from distant astrophysical sources in the universe. Unlike photons or other charged particles, neutrinos can travel long distances unaffected by interference from magnetic fields or matter. These characteristics make neutrinos a valuable tool for the study of the universe. Searches for neutrinos from Supernova, dark matter, point sources of muon neutrinos and diffuse sources of high energy electron and muon neutrinos have demonstrated the physics potential of a deep ice neutrino detector.

In the late 1980's, the National Science Foundation funded a proposal for construction and operation of the first high-energy neutrino telescope in the ice sheet at the South Pole, known as the Antarctic Muon and Neutrino Array and Detector (AMANDA). The AMANDA telescope is currently the largest neutrino detector in the world and contains over 700 optical modules installed in 19 vertical strings arranged in a 200-meter diameter circular pattern in the ice sheet at the South Pole. The AMANDA telescope was completed in several phases known as AMANDA-A, AMANDA-B10, and AMANDA II. AMANDA-A and AMANDA-B10 were completed in 1997 and are comprised of 10 strings containing optical modules placed at depths ranging from 800 meters to 1,000 meters (AMANDA-A) and 1,450 to 2,100 meters (AMANDA-B10). The third phase, known as AMANDA II, was completed in 2000 and includes nine additional strings containing optical modules placed at depths ranging from 1,500 meters to 2,300 meters. During the progress of the AMANDA project, specific techniques were developed to efficiently drill holes into the ice sheet using a hot water drilling system and successfully deploy strings of optical detector modules.

AMANDA has been effective in the study of very high energy neutrinos over a wide range of energy ranges and, based on data collected to date, has enabled the reconstruction of more than one hundred atmospheric neutrino events. The AMANDA results have demonstrated that the Polar Plateau ice sheet in Antarctica is an ideal medium for a large neutrino telescope and that the technology needed to deploy the detectors is well-proven. However, to detect a wider diversity of possible signals, a larger detector is needed which will provide optimum angular and energy resolution thereby yielding the sensitivity required to detect neutrinos from additional sources. Based on AMANDA's performance, researchers have determined that a telescope one cubic kilometer in volume and consisting of at least 4,800 optical modules arranged on 80 detector strings in the ice sheet at depths up to 2,450 meters would be needed to achieve required level of performance.

The proposed action will result in a telescope that has been specifically designed to detect a wide diversity of high energy neutrinos of astrophysical origin. Alteration of the design (e.g., fewer optical modules, modification of the array geometry) would likely compromise the scientific goals of the project. As a result, the Comprehensive Environmental Evaluation focuses on two alternatives, the construction and operation of the telescope as designed (i.e., the proposed action) and the no action alternative. These alternatives, including a discussion of possible options and alternatives not considered are summarized in the following sections.

2.2 Alternative A – Conduct Project IceCube

Project IceCube, the proposed action, consists of the installation and operation of a large neutrino telescope at the South Pole. The first phase of the project involves the refinement and construction of equipment needed to efficiently drill suitable holes in the ice sheet and deploy the optical detector modules, cabling, and support structures. The telescope itself would be installed over a 6-year period and would consist of 5,120 optical modules strategically placed both on the surface and at varying depths to 2,450 meters within a cubic kilometer volume of the polar ice sheet. During the construction and installation phases of the Project, other tasks would be performed to provide the resources (e.g., data acquisition and transfer, software) needed to operate the telescope and interpret the results. Although the design of the proposed telescope is fixed in order to meet specific scientific goals, the following options have been considered as possible alternatives to the installation and operation of Project IceCube.

2.2.1 Option A1 – Support Project IceCube Primarily with Amundsen-Scott Station Resources

In this option, the majority of support facilities and resources for Project IceCube would be provided by the Amundsen-Scott Station. The first several years of Project IceCube (i.e., 2004-2007) would coincide with the completion of the South Pole Station Modernization (SPSM) project. Station resources and support logistics (e.g., airlift capabilities) would be needed to complete SPSM construction as well as sustain normal operations and research activities during this period. The proposed schedule for Project IceCube has been designed to coordinate the use of these resources at levels which are consistent with SPSM construction activities.

Resources dedicated to Project IceCube would include facilities for drilling and array deployment, science facilities, equipment and vehicles, logistical support flights, and science and technical staff. Most of the resources needed to support the Project such as personnel facilities (e.g., food service, berthing), cargo, fuel, and waste handling facilities, would be provided by the Amundsen-Scott Station. Careful planning of shared resources, particularly personnel support facilities and services would be needed to ensure that the requirements of ongoing Station operations and SPSM as well as Project IceCube are adequately met without significant compromise. Some resources from the old Station scheduled to be decommissioned during SPSM (e.g., Summer Camp) may be allocated to Project IceCube as they become available.

2.2.2 Option A2 – Delay the Initiation of Project IceCube Until the Completion of SPSM

In this option, installation of the Project IceCube telescope and the associated need for Station resources would be postponed until SPSM activities are completed. The resources needed to install and operate Project IceCube would be the same as those described for Option A1 but would be utilized on a different schedule. By delaying Project IceCube until after SPSM, potential conflicts for common resources such as personnel support facilities, services, equipment, and logistical support flights would be avoided. For example, the maximum number of logistical support flights to the South Pole in a year during combined SPSM and Project IceCube activities (Option A1) could be as high as 340, while the maximum number of flights in a year after SPSM was completed (Option A2) would be 246.

2.2.3 Option A3 – Support Project IceCube Using Resources Independent of Amundsen-Scott Station Facilities

Consistent with Options A1 and A2, Project IceCube would be installed approximately 0.5 kilometers from the Amundsen-Scott Station but would be operated as an independent facility. Most of the support infrastructure and resources needed to install and operate the telescope would be solely dedicated to the Project. This independently operated facility would include the Project facilities, laboratory, personnel support facilities and related services (e.g., berthing, food service), cargo handling and storage, fuel, and waste handling facilities.

Although the goal of this option would be to operate Project IceCube as independently as possible, for practical reasons, certain basic services would still need to be shared with the Station such as communications and data transfer, aircraft handling, and emergency services (medical, fire, spill response).

2.3 Alternative B - Do Not Conduct Project IceCube (No Action Alternative)

In this alternative, Project IceCube would not be conducted and activities representative of the current level of scientific activities and associated support operations at the Amundsen-Scott Station would continue. Environmental impacts associated with these activities such as the physical disturbance of the snow and ice firn, the release of ambient air emissions due to the combustion of petroleum hydrocarbon fuels, and the deployment of irretrievable equipment would continue. Snow and ice firn in the portion of the Dark Sector which was planned for Project IceCube would continue to be used by AMANDA and may be disturbed by other research projects.

2.4 Alternatives Not Considered

The technical approach for the proposed action described in this CEE was designed to achieve the technical requirements of the research and minimize environmental impacts. The following alternatives were identified but were eliminated from further consideration because of technical or logistical considerations.

2.4.1 Operate Project IceCube With a Modified Design

Project IceCube was designed to achieve specific scientific goals. Alternatives involving changes to the scientific components of Project IceCube including the size or configuration of the array and detector systems or data collection systems were eliminated from consideration because they would fail to meet technical requirements of the Project.

2.4.2 Install and Operate Project IceCube Using Modified Operations and Logistical Support

The equipment and facilities selected for Project IceCube were specifically configured to maximize energy efficiency (e.g., fuel consumption, waste heat recovery) while meeting Project requirements and being compatible with current USAP operations. Alternative drilling equipment, support facilities, and energy sources (e.g., propane, liquidified natural gas, solar) were considered in the design of the Project and therefore can be eliminated from further consideration in this CEE. Because diesel fuel is the primary source of energy in the USAP and is available through the existing fuel distribution infrastructure at McMurdo and Amundsen-Scott Stations, it was chosen as the energy source for Project IceCube.

2.4.3 Install and Operate Project IceCube at a Location Other than the South Pole

Locations other than the South Pole may provide a suitable media for the installation of a neutrino telescope. Only deep oceans or dark ice meet the criteria for the effective operation of neutrino telescopes (e.g., size, transparency, depth). Marine environments are currently under evaluation for the deployment of large-scale detector systems (i.e., ANTARES project) but must overcome significant challenges such as the optical background, fouling, transmission properties of the water, sea conditions, and data recovery/transmission infrastructure. The solid, relatively consistent composition of an ice sheet eliminates some of these concerns.

Other locations in Antarctica offer access to thick ice sheets for the deployment of the large-scale detector systems, but they do not offer the established infrastructure needed to support a project of this magnitude.

The successful deployment and operation of the AMANDA series of detectors demonstrates that the South Pole is an optimal location for the proposed action. No other locations were considered in this CEE.

2.4.4 Support Project IceCube Using Other Transportation Mechanisms to Deliver Project Materials to the South Pole

Currently LC-130 aircraft exclusively provide all personnel and supply transport capability for the Amundsen-Scott Station at the South Pole. Theoretically other transportation mechanisms may be available to deliver fuel and supplies to the South Pole for Project IceCube. These alternate methods could include the use of other types of aircraft or surface transportation vehicles but these mechanisms have not been established in the USAP to the extent needed to support Project IceCube.

The ski-equipped LC-130 is the largest U.S. aircraft capable of carrying cargo, fuel, or personnel that can land at the South Pole's skiway. While smaller cargo carrying ski-equipped aircraft (e.g., Twin Otter) are also used by the USAP and are capable of traveling to the South Pole from McMurdo Station, they do not have the capacity to deliver Project equipment, fuel, and supplies to the South Pole to meet the proposed schedule.

Surface transportation (i.e., overland traverse) vehicles may be potentially available in several years to supplement the USAP's LC-130 airlift capability and transport fuel and other supplies to the South Pole from McMurdo Station. The USAP is currently performing proof of concept testing to evaluate the overland traverse mode of cargo transport. Overland traverse capabilities, if feasible for the USAP, would not be available during the early years of the proposed action, therefore it has not been considered a viable transport method for this CEE. However, should the USAP develop full-scale traverse capabilities, these resources may be available to provide support to Project IceCube.

3.0 DESCRIPTION OF PROPOSED ACTIVITIES

3.1 Introduction

This chapter of the Comprehensive Environmental Evaluation describes the proposed activities associated with Project IceCube. Section 3.2 discusses the purpose and need for the proposed action including a description of the scientific goals. Section 3.3 provides a comprehensive description of all aspects of Project IceCube including the scientific instrumentation, drilling and array deployment, and data collection. Finally, Section 3.4 contains a detailed description of the nature and intensity of proposed action. Much of the information, specifications, and procedures presented in this chapter were derived from the *IceCube Preliminary Design Document* (reference 2) and related planning and design presentations.

3.2 Purpose and Need

The National Science Foundation proposes to fund the construction and operation of a high-energy neutrino telescope at the South Pole. The telescope, known as Project IceCube, is designed to detect subatomic particles (i.e., neutrinos) from distant astrophysical sources in the universe. The proposed telescope will consist of an array of optical modules arranged within a cubic kilometer volume of ice in the polar ice sheet, and would be the largest telescope of its type ever built.

Neutrinos are high-energy subatomic particles produced by the nuclear reactions such as decay of radioactive elements, and are relics of high energy events that occur in the universe. Unlike photons or other charged particles, neutrinos can travel long distances unaffected by interference from magnetic fields or matter. These characteristics make neutrinos a valuable tool for the study of the universe but also make them difficult to detect. A neutrino telescope detects the presence of a passing neutrino as it crashes into a proton or neutron, yielding a particle called a muon (a heavy electron). Unlike the invisible neutrino, the muon gives off a shockwave of blue light, known as Cherenkov radiation, as it travels through the earth. Detection of the Cherenkov radiation allows effective reconstruction of the muon's path.

The IceCube Project at the South Pole is a logical extension of the research and development work performed over the past several years by the AMANDA Collaboration. The optical properties of ice deep below the Pole have been established, and the detection of high-energy neutrinos has been demonstrated with the existing detector. This accomplishment represents a proof of concept for commissioning a new instrument, IceCube, with superior detector performance and an effective telescope size at or above the kilometer-scale.

IceCube scientific goals require that the detector have an effective area for muons generated by cosmic neutrinos of one square kilometer. The detector will utilize South Pole ice instrumented at depth with optical sensors that detect the Cherenkov radiation.

The construction of neutrino telescopes is overwhelmingly motivated by their discovery potential in astronomy, astrophysics, cosmology and particle physics. To maximize this potential, one must design an instrument with the largest possible effective telescope area to overcome the small neutrino cross section with matter, and the best possible angular and energy resolution to address the wide diversity of possible signals. A well-designed neutrino telescope can

- search for high energy neutrinos from transient sources like Gamma Ray Bursts (GRB) or Supernova bursts;
- search for steady and variable sources of high energy neutrinos, e.g. Active Galactic Nuclei (AGN) or Supernova Remnants (SNR);
- search for the source(s) of the cosmic-rays;
- search for Weakly Interacting Massive Particles (WIMPs) which may constitute dark matter;
- search for neutrinos from the decay of superheavy particles related to topological defects;
- search for magnetic monopoles and other exotic particles like strange quark matter;
- monitor our Galaxy for MeV neutrinos from supernova explosions and operate within the worldwide SNEWS triangulation network;
- search for unexpected phenomena.

An overview of neutrino physics and a description of the goals of Project IceCube can be found at http://icecube.wisc.edu/brochure. A detailed technical description of the scientific principles for the detection of high-energy neutrinos may be reviewed in the *IceCube Preliminary Design Document*, Revision: 1.24 (reference 2), which is available at http://icecube.wisc.edu/reviews_and_meetings/Oct2001_hartill/Prelim_Design_Doc/PDD.pdf.

The main goal of Project IceCube is the detection of extraterrestrial sources of very high energy neutrinos. In this respect, IceCube will reach a sensitivity which is more than one order of magnitude below conservative "upper bounds" derived from cosmic-ray observations, and three orders of magnitude below bounds derived from gamma ray observations alone. The published AMANDA limit has already improved previous experimental limits by more than a factor 10 and will be improved by AMANDA- II and IceCube by roughly an additional 1.0 and 2.5 orders of magnitude, respectively. Within this range of sensitivity, models predict between "several" and thousands of events per year. Other events expected to be detected by IceCube include Supernova, Gamma Ray Bursts, and EeV events. In addition, IceCube has a realistic chance to identify tau neutrinos via "double-bang" events, with up to 100 events per year expected for certain topological defect models.

Project IceCube will be a multi-purpose detector. Beside high energy neutrino astronomy, it can be used to investigate a series of other questions, including:

- Magnetic monopoles: Present limits for the flux of relativistic monopoles can be improved by two orders of magnitude. One also can search for slow monopoles catalyzing proton decay, or for strange quark matter.
- Neutrinos from WIMP annihilation: IceCube can play a complementary role to future direct detection experiments, particularly for high WIMP masses. The instrument is unique for TeV dark matter.
- MeV neutrinos from supernova bursts: IceCube will detect a supernova burst over the whole Galaxy, and as far as the Magellanic clouds.
- As a by-product, neutrino oscillations, physics (and gamma-ray astronomy) with downgoing muons, or even questions of glaciology can be investigated.

The goals and the proposed scope of Project IceCube were evaluated by several independent review panels in 2000, including a National Science Foundation Review Panel and the Scientific Assessment Group on Experimental Non-Accelerator Physics (SAGENAP) on behalf of the Department of Energy and National Science Foundation.

3.3 Description of Project IceCube

Project IceCube encompasses the construction and operation of a high-energy neutrino telescope at the South Pole. The telescope will consist of an array of optical modules arranged within a cubic kilometer volume of ice in the polar ice sheet. The optical sensors will locate sources of high-energy neutrinos from astrophysical events, such as exploding stars, gamma ray bursts, and cataclysmic phenomena involving black holes and neutron stars.

The IceCube Project at the South Pole is a logical extension of the research and development work performed over the past several years by the AMANDA Collaboration. The optical properties of ice deep below the South Pole have been established, and the detection of high-energy neutrinos demonstrated by the existing AMANDA detector. To expand the proof of concept, an instrument the size of the proposed Project IceCube telescope will be needed to achieve the scientific goals and meet the required level of performance.

Project IceCube will deploy an array of 5,120 optical modules into the polar ice sheet using a series of drilling and trenching systems. The modules will be connected to a central data acquisition system (DAQ) network processing facility at the South Pole. Data will subsequently be filtered and transferred via satellite to researchers in the northern hemisphere. A detailed description of Project IceCube, including the scientific components, drilling, array deployment, and data management activities follows.

3.3.1 Scientific Instrumentation

This section describes the scientific components of Project IceCube, including the instrumentation, locations, deep array, surface array, and associated cable connections.

3.3.1.1 Overview of Components and Locations

The scientific components of Project IceCube comprise an array of 5,120 digital optical modules (DOMs) arranged in 80 vertical strings within a cubic kilometer volume of ice in the polar ice sheet at the South Pole. The array will be located approximately 0.5 kilometers from the Amundsen-Scott Station, adjacent to the aircraft skiway encompassing the AMANDA II and SPASE-2 detectors. Figure 3-1 depicts the proposed location of the IceCube array on a site map.

Figure 3-1. Proposed Location of Project IceCube Array

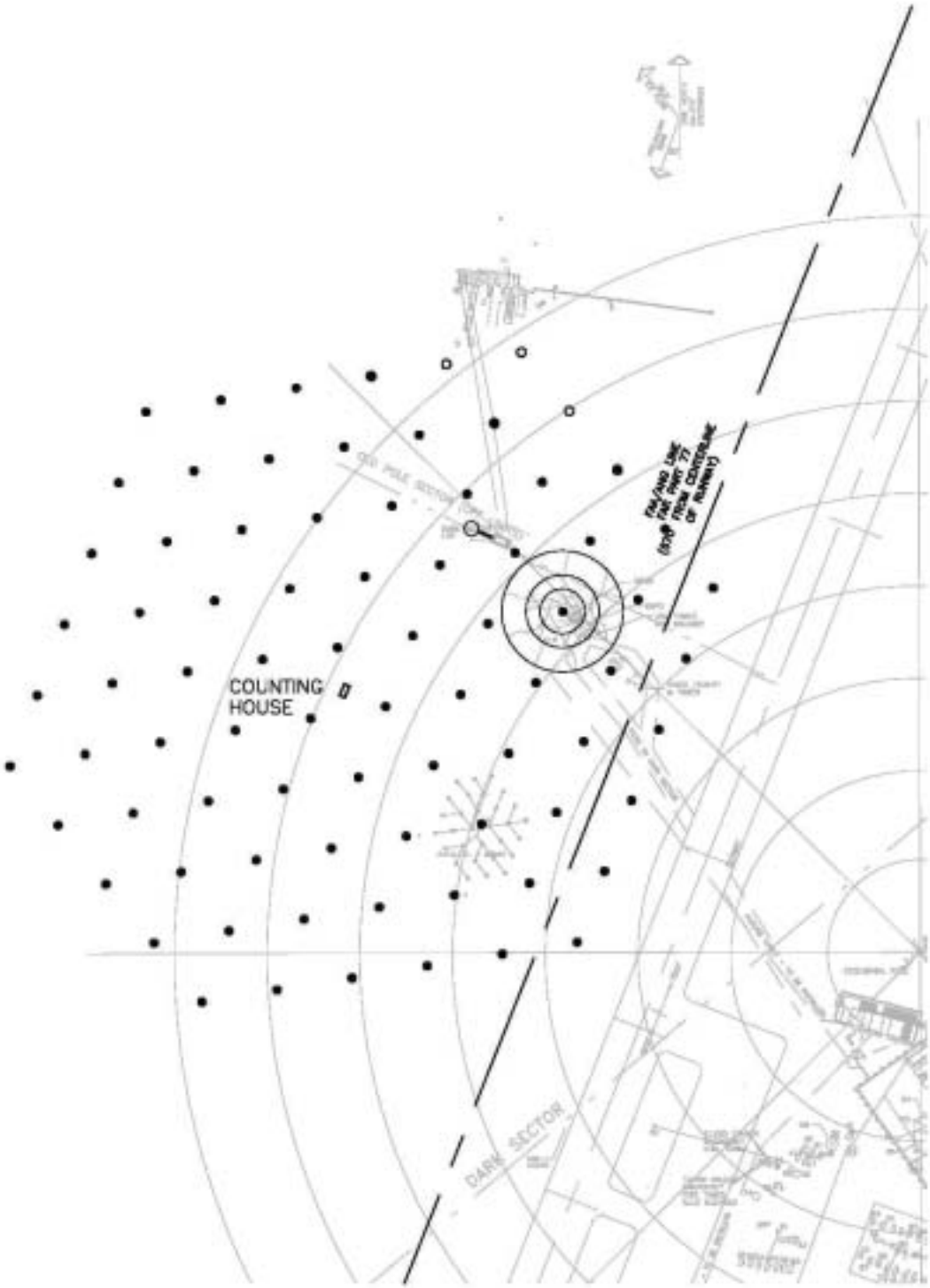

The DOMs in the IceCube array will be installed in both a deep and surface array over an area of approximately 1 square kilometer. Figure 3-2 depicts the profile of the deep and surface components of the array. The deep detector array comprising 4,800 DOMs will be placed at depths up to 2,450 meters in the ice while the surface array, known as IceTop, will comprise 320 DOMs and will be placed at a depth of 1 meter. All components of the array will be connected to a central instrumentation support facility, the Counting House. The array detectors will radiate from the Counting House in a hexagonal pattern and will be arranged in a grid pattern spaced approximately 125 meters apart (Figure 3-1). The existing AMANDA-II detector and SPASE-2 array will be incorporated into the IceCube array.

Figure 3-2. Deep and Surface Array Profile

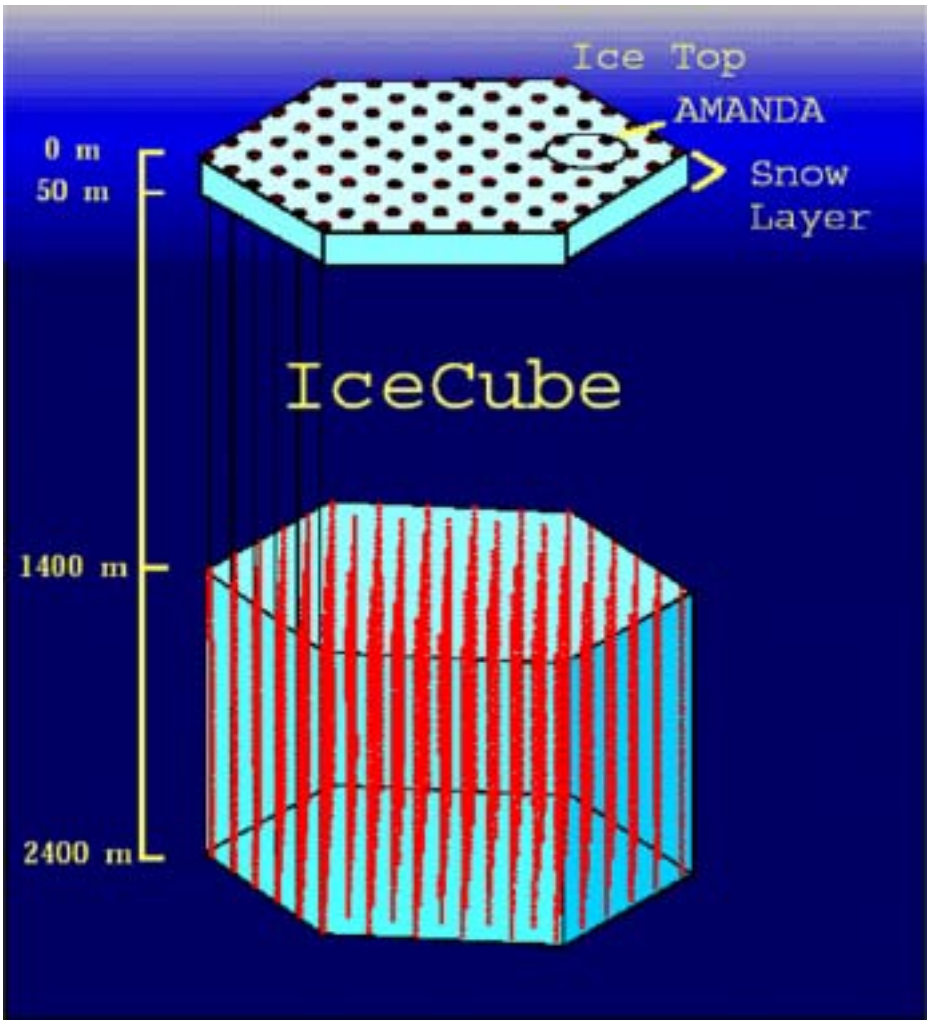

The DOM is a self-contained data acquisition device platform that is capable of sensing the Cherenkov photons, storing data internally and, when requested, transmitting them to a surface data acquisition (DAQ) system which digitizes the amplitude of the light pulse and provides control signals. The basic elements of the DOM are the optical sensor for Cherenkov light, an electronic circuit board for processing signals, a HV generator for the optical sensor, a flasher board for calibration purposes, magnetic shield, glass pressure housing, a coupling optical silicone gel between the tube and envelope and the electronics,

mechanical harness, and cables. The general physical layout of a generic DOM is shown in Figure 3-3. Key elements of the DOM are described below.

Figure 3-3. Digital Optical Module (DOM) Schematic

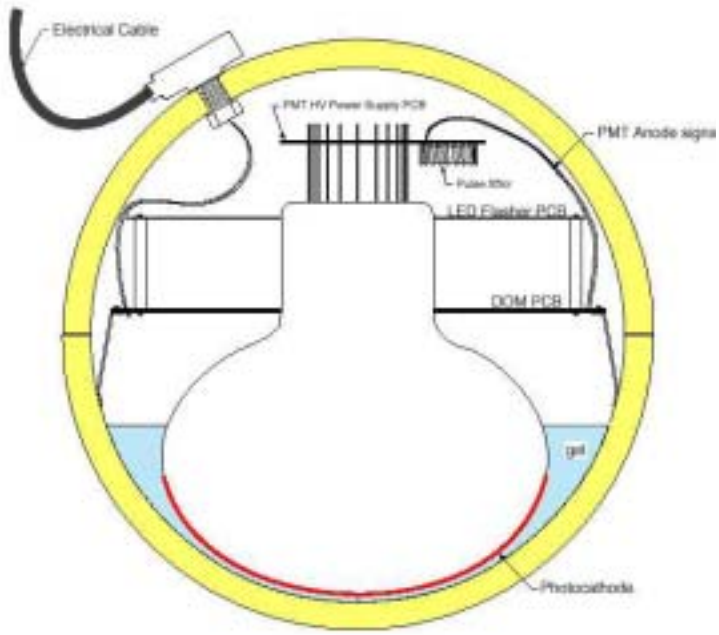

3.3.1.1.1 Optical Sensor

The optical sensor is a medium-size (~ 10 inch diameter) hemispherical 10-stage photomultiplier tube (PMT), made by Hamamatsu. PMTs very similar to the intended device have been deployed within AMANDA with generally excellent experience. These large PMTs offer surprisingly good time-resolution, as indicated by a transit-time-spread (TTS) for single photo-electron (SPE) pulses of about 2.5 ns rms. Despite their large photocathode area, these PMTs, in total equilibrated darkness, generate only ~ 300 Hz or less of spontaneous noise pulses at temperatures less than 0^0C. Photocathode sensitivity extends well into the UV, limited by the optical transmission of the glass pressure sphere at 350 nm.

3.3.1.1.2 HV Power Supply

High Voltage potential for proper PMT operation (nominally up to 2,000 VDC) is supplied and controlled within the DOM using a modular power supply design consisting of a DC-HVDC generator/control interface and delivered to the PMT via a Passive Base board voltage divider. Voltage level may be remotely monitored and reset as required to status and provide proper DOM operation.

3.3.1.1.3 Flasher Board

The string DOMs are each equipped with twelve GaN LEDs, which emit predominantly in the near-UV at 380 nm. The luminous intensity and the pulsing rate may be varied over a wide range under software control. At their brightest, these beacons can be seen by OMs 200 m distant. Due to their high intrinsic

capacitance, LEDs are not easy to pulse at ns speeds; the pulse width is ~ 5 ns. The LEDs are broad angular emitters, spaced at 60º around a vertical axis, and are canted over to produce a roughly hemispherical source. Some AMANDA analog OMs have been equipped with similar flasher boards using GaN LEDs emitting at 450 nm; these have also proved to be useful for test purposes. The PMT HV must be turned down at the emitting DOM to avoid potentially harmful pulses.

The flasher boards can be used to knit together a highly over-constrained measure of relative DOM positions within the array. They can also be used to study optical properties of the ice at these wavelengths.

3.3.1.1.4 Pressure Housing

The spherical glass pressure housings are standard, well-proven items, used in numerous oceanographic and maritime applications. For IceCube, the most important qualities are mechanical reliability, optical transmission, and potassium content, and cost. Over 700 of these items, in various implementations and sizes, have been deployed in AMANDA without evidence of a single implosive failure. For IceCube, a 33 cm diameter sphere is the optimum size. While larger spheres are available that could accommodate larger optical sensors, the costs for drilling larger diameter holes (with an appropriate margin of safety during deployment) rise very quickly, making larger sizes a poor overall trade-off.

Because the Cherenkov radiation mechanism produces the greatest intensity at ever-smaller wavelengths, limited ultimately by self-absorption, it is of interest to push the optical transmission limit of the glass to a value below the quantum efficiency limit of the PMT. For processing and mechanical strength, the manufacturers use a borosilicate glass that limits transmission to about 350 nm, well above the expected ~ 220 nm limit for deep polar ice.

The potassium content of the typical borosilicate glass includes a naturally occurring fraction of ^{40}K. The β particle from the decay of this isotope produces Cherenkov radiation at a level that dominates the observed PMT noise rate, unless steps are taken to reduce the overall potassium content of the glass. At the request of IceCube collaborators, manufacturers have been able to produce glass with substantially lowered potassium content without compromise to important processing, mechanical, or optical qualities. It is anticipated that IceCube optical modules will display noise rates very close to those of isolated dark-adapted PMTs.

3.3.1.2 Deep Array

The deep array of Project IceCube will consist of 80 vertical strings each containing 60 digital optical modules (DOMs) placed at depths up to 2,450 meters in the ice. Each vertical string in the deep array has a fixed length of 2,450 meters, and will contain 60 DOMs spaced at 17 meters apart, and associated cable. The DOMs within each vertical string will be placed at depths between 1,450 meters and 2,450 meters where the attenuation and scattering lengths of blue light have been established to be sufficiently good for the purposes of the research. Figure 3-4 depicts the configuration of an individual DOM harness and associated connections. Each string will be deployed into a water-filled borehole drilled into the ice sheet, which will subsequently freeze once the string is in-place.

3.3.1.3 Surface Array

IceTop, the surface array, will be used as a junction to connect the deep ice strings to the surface electronics and will function as a surface airshower detector that will be used to calibrate the system. IceTop will consist of 160 ice tanks 3.6 square meters in size, placed in excavations approximately 1 meter in depth, filled with water, then frozen using controlled processes for gas extraction and freeze rate.

Each ice tank will consist of a cylindrical-shaped polyethylene tank with a wooden frame and lid, two pumps, and will contain two DOMs connected to the deep array and instrumentation support facilities by a series of subsurface cables. Each tank will be buried so that its top is flush with the snow surface. Figure 3-5 illustrates the configuration of an individual IceTop tank and related instrumentation. The IceTop tanks will be arranged in pairs, approximately 10-15 meters apart, and will be placed near the top of each of the 80 deep array strings. Figure 3-2 depicts a schematic of the string configuration and IceTop array.

Figure 3-4. Digital Optical Module (DOM) and Harness

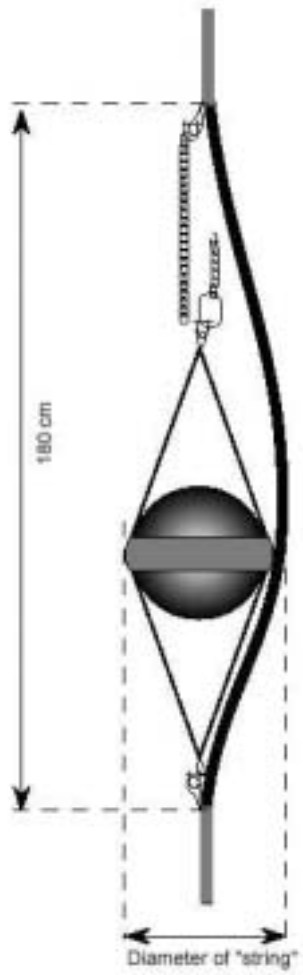

Figure 3-5. IceTop Tanks

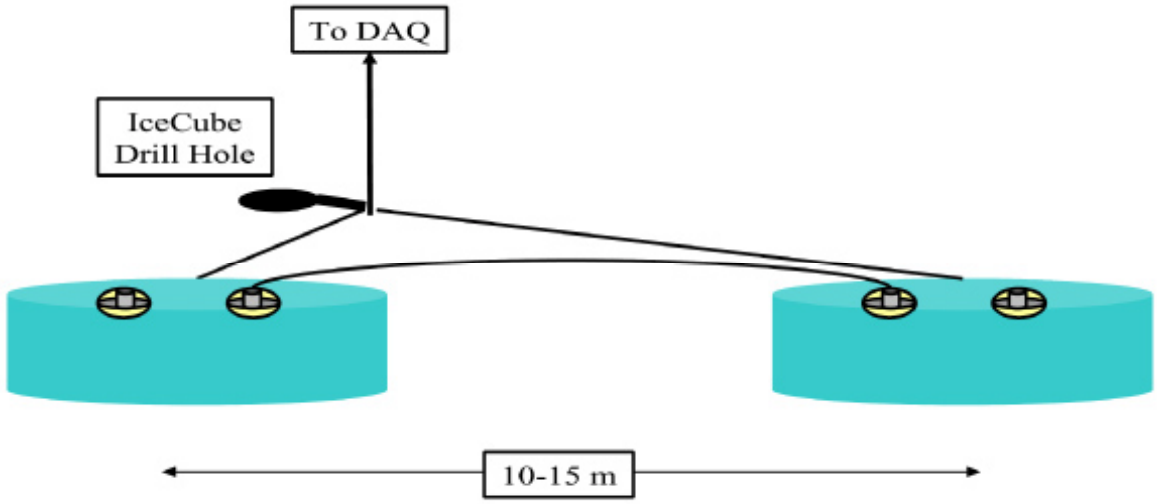

3.3.1.4 Counting House, Cable and System Connections

Cables from each of the 80 vertical strings and 160 IceTop tanks of the array will be connected to a data processing facility known as the Counting House. The Counting House will contain the instrumentation used for data collection and processing, centrally located within the array pattern (Figure 3-1), and connected to the array via surface cables using a junction located near each of IceTop tanks. Figure 3-6 depicts a schematic of the surface cable connections to the deep array strings, IceTop tanks, and Counting House.

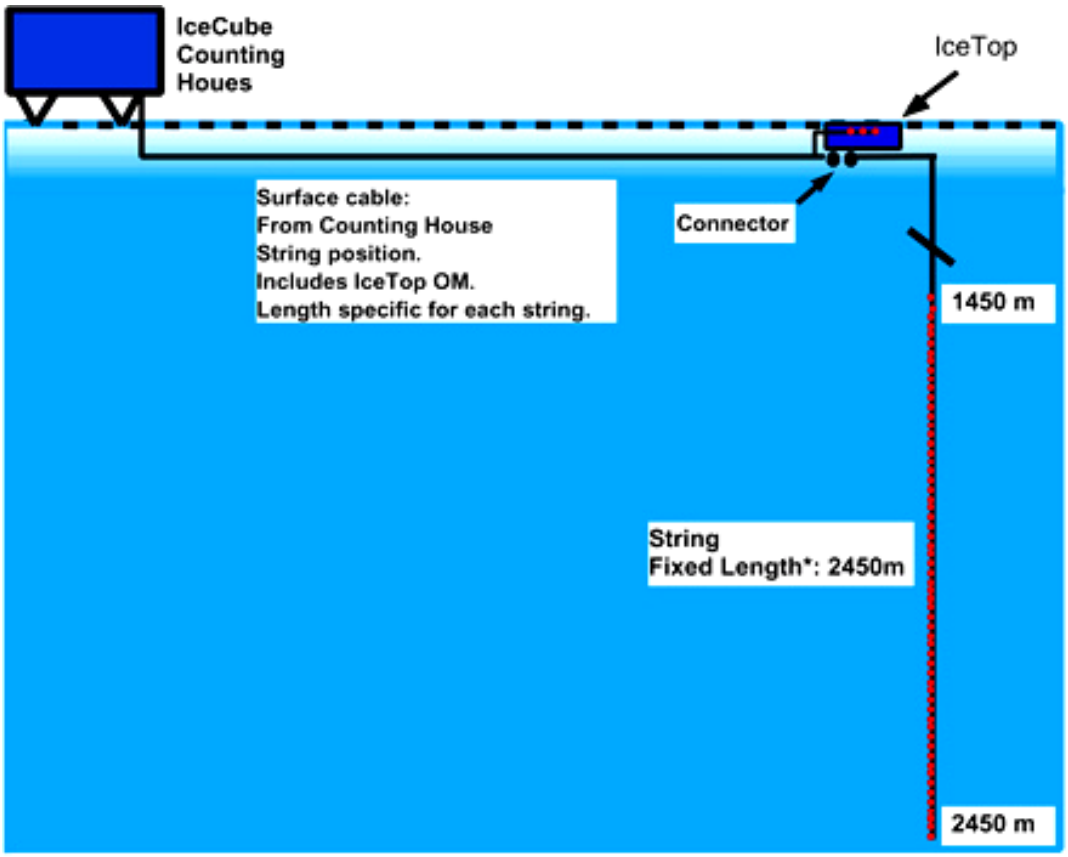

Figure 3-6. String Configuration and Deep Array, IceTop, and Counting House

The DOMs in the deep and surface array will be connected to Counting House data acquisition system (DAQ) network using a system of dedicated DOM hubs. The 80 strings of the deep array strings will yield approximately 80 cable connections to 80 DOM hubs while the 320 DOMs in IceTop will yields 320 cable connections into 8 DOM hubs. The functions of the DOM Hub include power distribution and control, message control, data flow management from the DOMs, downloading of software, firmware, and operating parameters, and generation of time calibration signals.

Additional components of the IceCube network, including dedicated Project computers, are anticipated to be housed in dedicated laboratory space in pod B2 of the new Station. Communications links will be established between the Counting House and the new Station and the DAQ network will be connected to the Station's local area network (LAN), internet connections, and satellite communications links.

3.3.2 Drilling and Array Deployment

This section describes the activities that will be performed to drill holes in the ice sheet and subsequent efforts to deploy the Project IceCube array.

3.3.2.1 Overview of Drilling Systems and Locations

The deep and surface arrays will be installed at 80 locations in the square kilometer area using a series of drilling and trenching systems. Figure 3-1 depicts the proposed location of the IceCube array on a site map. It is anticipated that the array will be installed during the austral summer season over a period of 6 years.

Drilling activities will utilize a newly developed hot water drilling system known as the Enhanced Hot Water Drill (EHWD). Hot water drilling provides the fastest and most efficient means to access the deep ice, whereby water is pumped at high pressure through a heating system and heated to near boiling temperature, and is then forced through a drill nozzle that directs a high-velocity stream of hot water against the ice in the hole, melting it.

The EHWD design represents an evolution of the AMANDA drill, which was a research tool. The EHWD is a production drill system capable of meeting Project IceCube requirements, notably drilling holes of 60 centimeter diameter to a depth of 2,450 meters.

To meet the goals and proposed schedule of Project IceCube at the South Pole, the EHWD will provide:

- Capability to drill 16 holes per austral summer season
- A volume of 757 liters of water per minute to the drill nozzle at 88^0C and 67 kg/cm of pressure
- Fuel consumption rate of 30,250 liters or less per on average over the entire course of the season (which includes start-up and shutdown fuel usage)
- Effective mobility to cover the square kilometer array
- Efficient mobilization and demobilization

The EHWD contains a series of components that are needed to supply and deliver hot water for drilling and to deploy the stings into the polar ice sheet. The EHWD components are divided into two functional areas, the Seasonal Equipment Site and the Tower Operations Site. Figure 3-7 depicts the layout of the EHWD components, while Figure 3-8 depicts a schematic of the EHWD system. The majority of the EHWD structures will be of modular design. Each module will be a nominal size of 2.4 meters high, 2.4 meters wide and 10 meters long, will be mounted on sleds, and will be heated.

Figure 3-7. Enhanced Hot Water Drill Layout

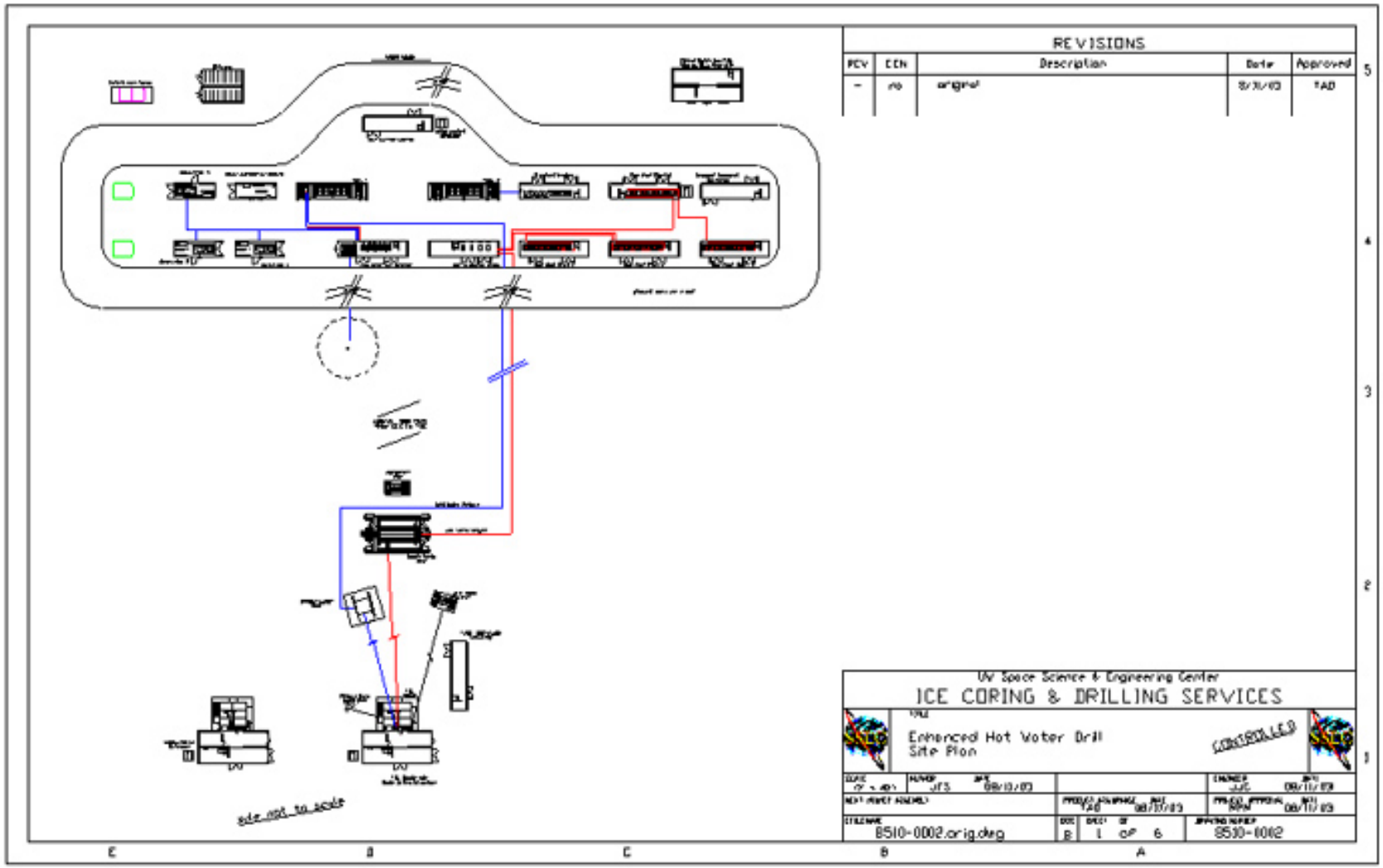

Figure 3-8. Enhanced Hot Water Drill Schematic

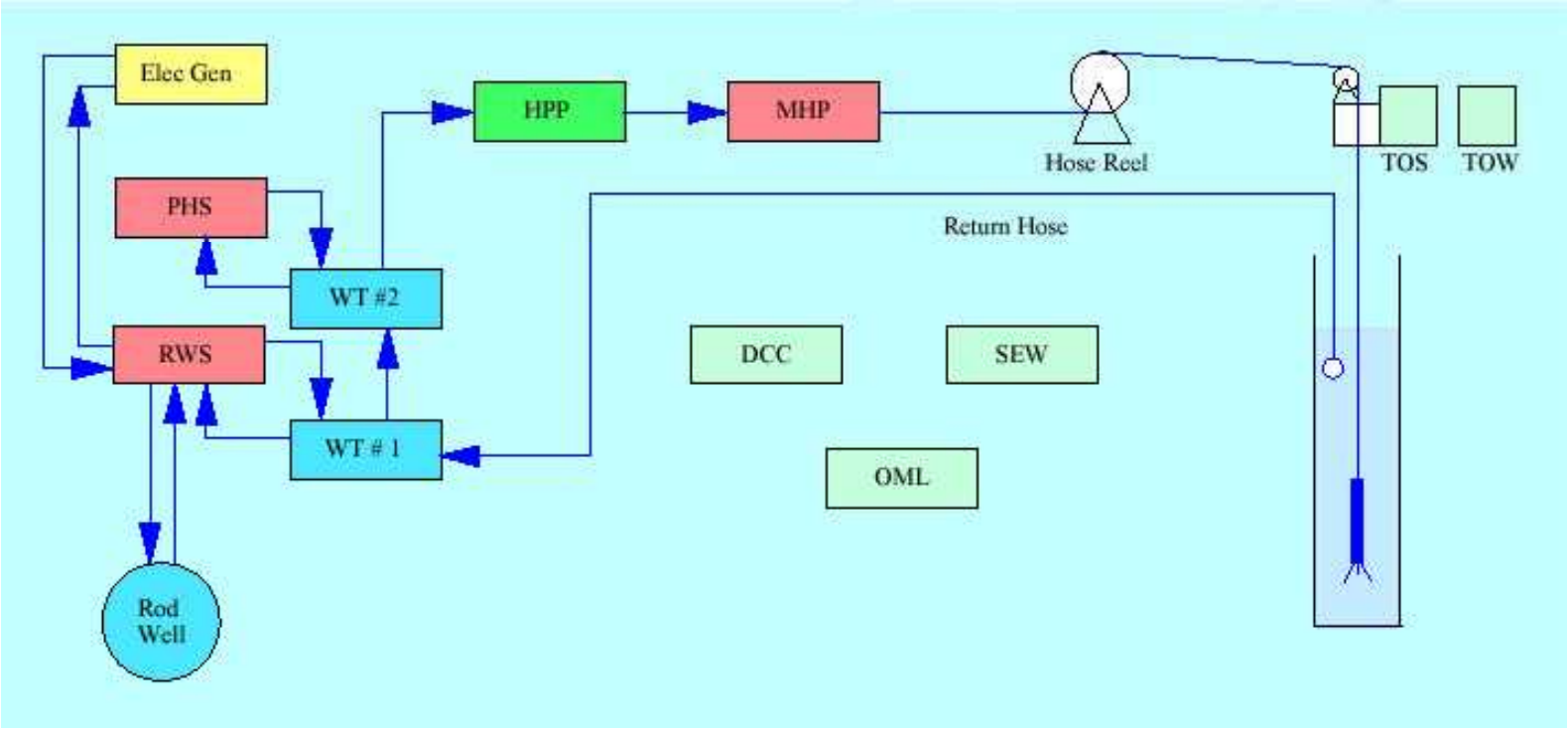

LEGEND

PHS	Pre Heat System	DCC	Drill Control Center
RWS	Rodriguez Well System	SEW	Seasonal Equipment Workshop
HPP	High Pressure Pumps	OML	Optical Module Lab
MHP	Main Heat Plant	TOS	Tower Operations Structure
WT #1	Water Tank #1	TOW	Tower Operations Workshop
WT#2	Water Tank #2		

The Tower Operations Site contains the components that will be used to perform drilling operations and deploy the strings at each of the 80 locations. The Seasonal Equipment Site will contain the equipment to generate power, produce hot water, and facilities to support drilling operations at the Tower Operations Site.

3.3.2.1.1 Tower Operations Site

The Tower Operations Site will contain structures and equipment to directly support drilling operations at each string location. Fuel for the TOS structures will be provided via mobile delivery. Figure 3-9 depicts the layout of the Tower Operations Site. The Tower Operations Site comprises of the following major components:

3.3.2.1.1.1 Tower Operations Structures (TOS)

The Tower Operations Structures consist of the tower which will be used to handle the hose and cable and contains platforms for drill assembly and optical module deployment and the modular structure containing the reel control, drill head and optical module storage and heated work area. Two Tower Operations Structures will be operated during drilling activities to enable efficient operations including simultaneous string deployment at one hole while preparation for drilling operations proceeds at a second hole. Figure 3-9 depicts the layout of the Tower Operations Site, including the Tower Operations Structures.

3.3.2.1.1.2 Tower Operations Workshop (TOW)

The Tower Operations Workshop (TOW) is a modular structure containing a heated work area for maintenance and repair of the drilling components. Figure 3-9 depicts the location of the TOW at the Tower Operations Site.

3.3.2.1.1.3 Reels, Hoses and Cables

Each of the water supply hoses and cables needed to support drilling operations will be mounted on separate reels. The reels include the Drill Supply Hose Reel (hot water), Drill Cable Reel, Return Water Hose Reel, and Return Water Pump Cable Reel. The Drill Cable Reel will have 3,600 meters of cable. The Drill Supply Hose Reel will have 2,900 meters of hose, the Return Water Reel will have 185 meters of hose, while the Return Water Pump Cable reel will have 185 meters of cable. Figure 3-9 depicts the location of the reels at the Tower Operations Site, while Figure 3-10 presents a rendering of the Drill Supply Hose Reel.

In general, water hoses at the Tower Operations site will be insulated or raised off of the snow surface, while electrical cables that run between the Seasonal Equipment Site and the Tower Operations Site will lay on the snow surface. Lines and cables that cross planned access pathways will be routed inside a culvert placed beneath the snow surface.

Figure 3-9. Tower Operations Site Layout

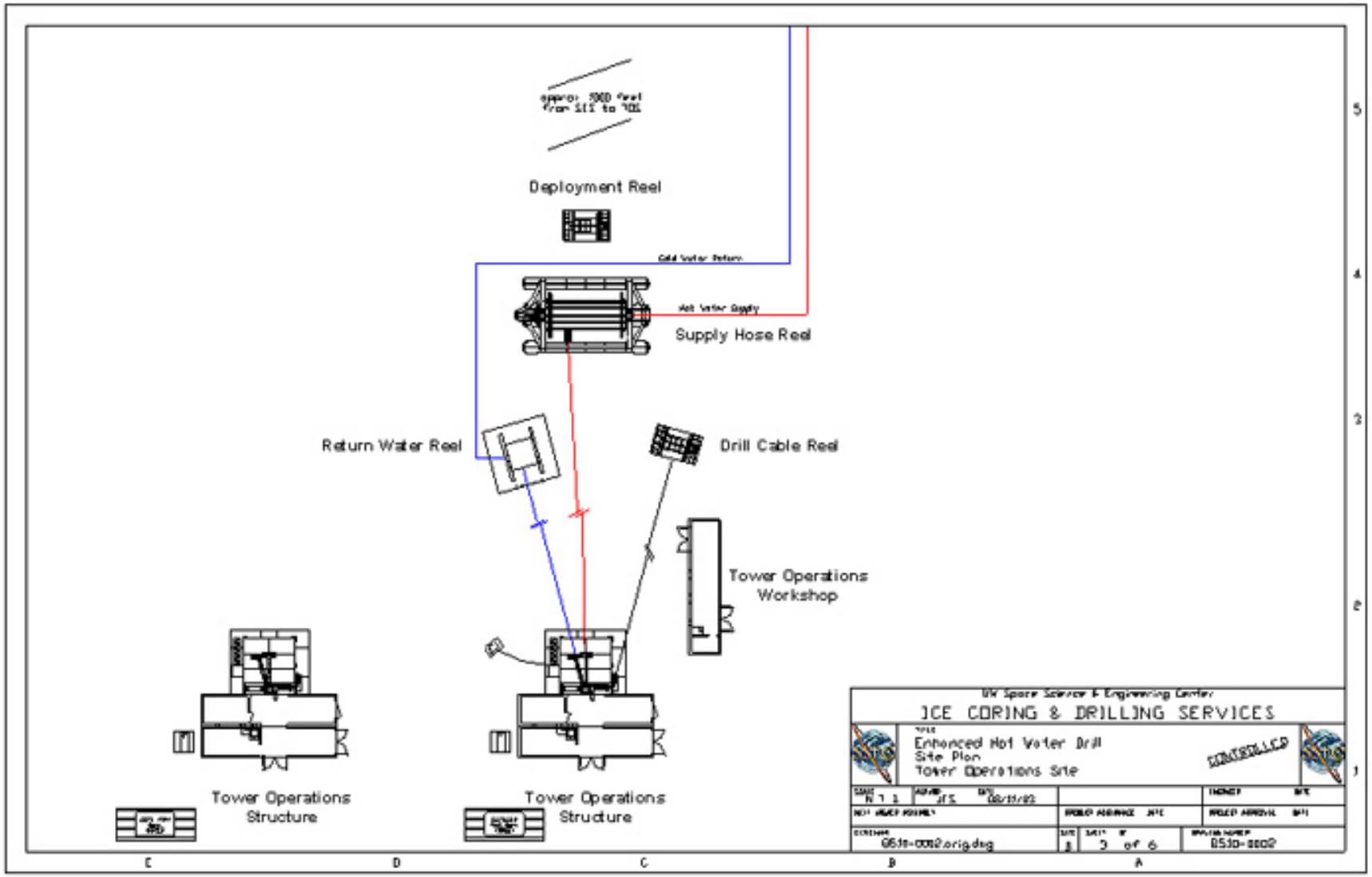

Figure 3-10. Supply Hose Reel Rendering

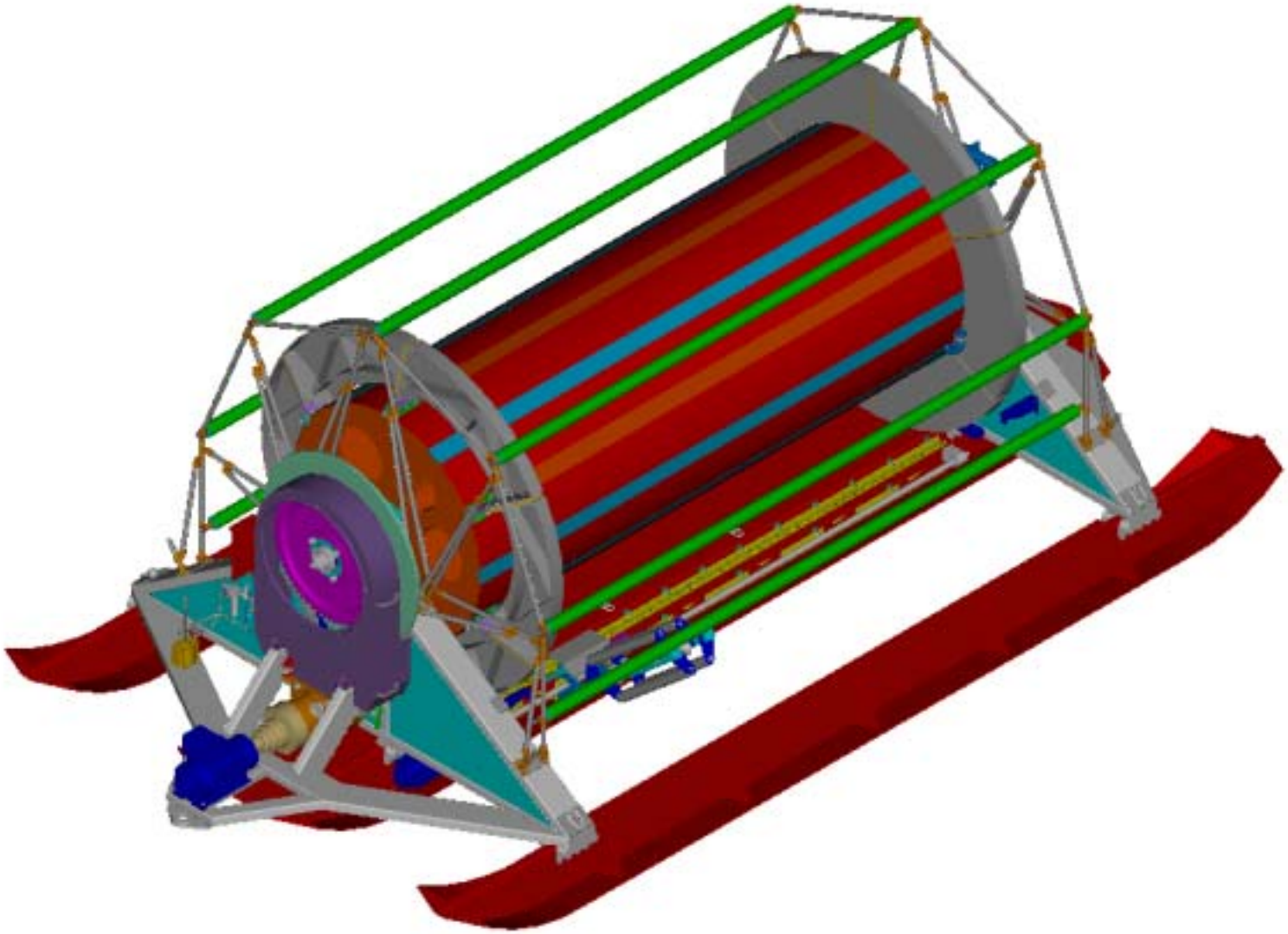

3.3.2.1.1.4 Firn Drill

In addition to the Tower Operations Site and the associated drilling equipment, a Firn Drilling System will be used to drill a 60 centimeter diameter hole through the softer snow surface at each string location in preparation for the larger EHWD. The Firn Drill will be attached to the Drill Supply Hose and will utilize the EHWD hot water supply and tower hoist. Figure 3-11 depicts the configuration of the Firn Drill.

Figure 3-11. Firn Drill Rendering

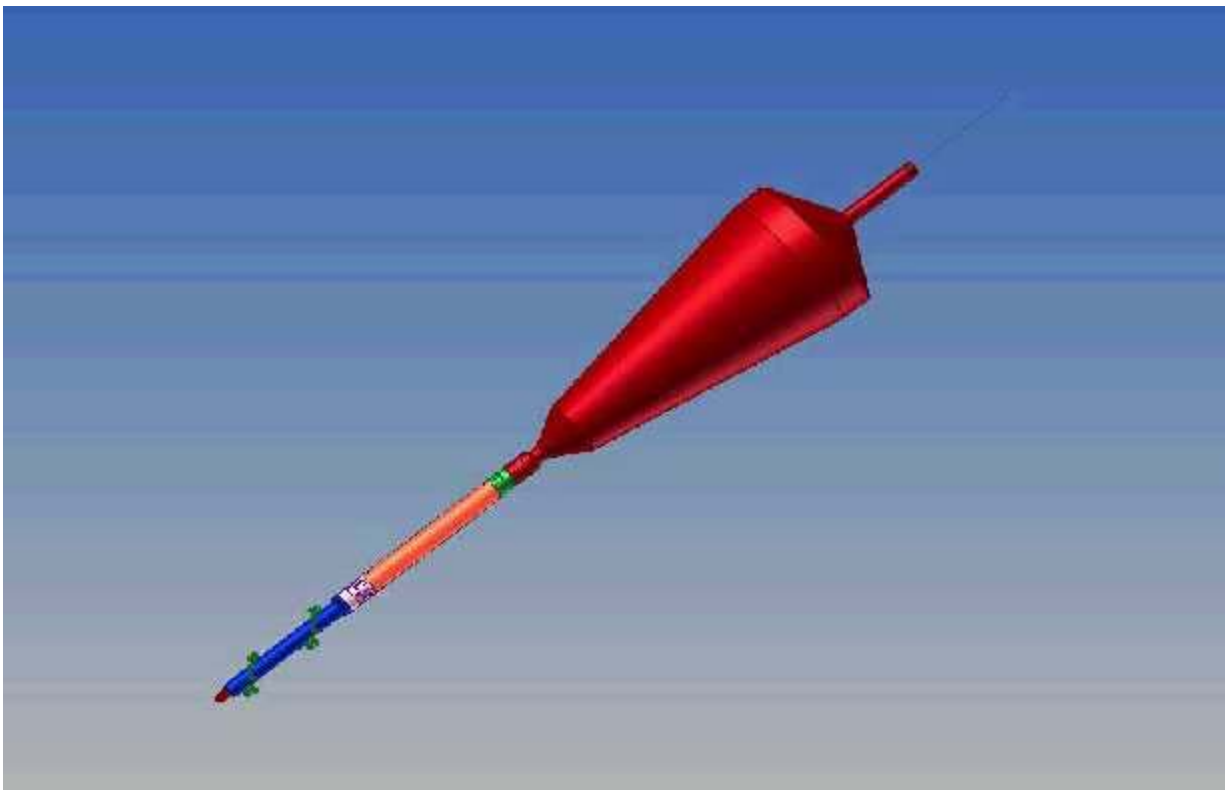

3.3.2.1.1.5 Drill Head Assembly

As an integral part of the EHWD, the Drill Head Assembly will be placed in the hole to supply the hot water to advance the holes to the 2,450 meter depth. The Drill Head Assembly contains the nozzle equipped with weights to maintain a vertical configuration and a series of monitors to maintain hole diameter and angle. The Drill Head Assembly will be attached to the Drill Supply Hose and tower hoist. Figure 3-12 depicts the construction of the Drill Head Assembly.

Figure 3-12. Drill Head Assembly

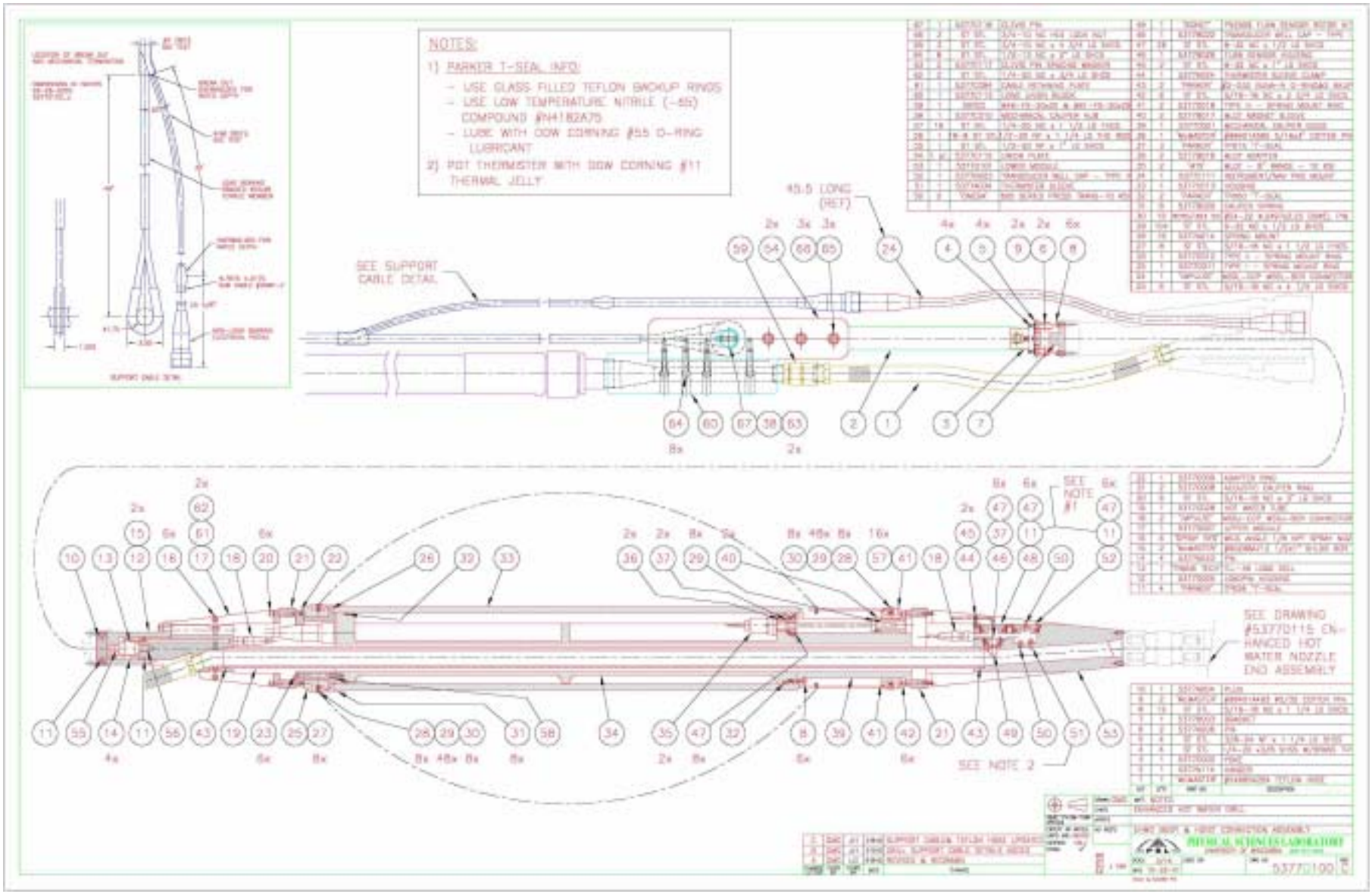

3.3.2.1.2 Seasonal Equipment Site

The Seasonal Equipment Site will contain the facilities needed to support drilling operations at the Tower Operations Site. The seasonal Equipment Site will be placed at a fixed location each season, and will be located within 300 meters of the holes scheduled for drilling. Figure 3-13 depicts the layout of the Seasonal Equipment Site, including a schematic of access pathways and water distribution lines. Water hoses at the Seasonal Equipment site will be insulated or raised off of the snow surface, while electrical cables will be installed within cable trays, wooden utility containers or will be placed on the snow surface. Lines and cables that cross planned access pathways will be routed inside a culvert placed beneath the snow surface.

Figure 3-13. Seasonal Equipment Site Layout

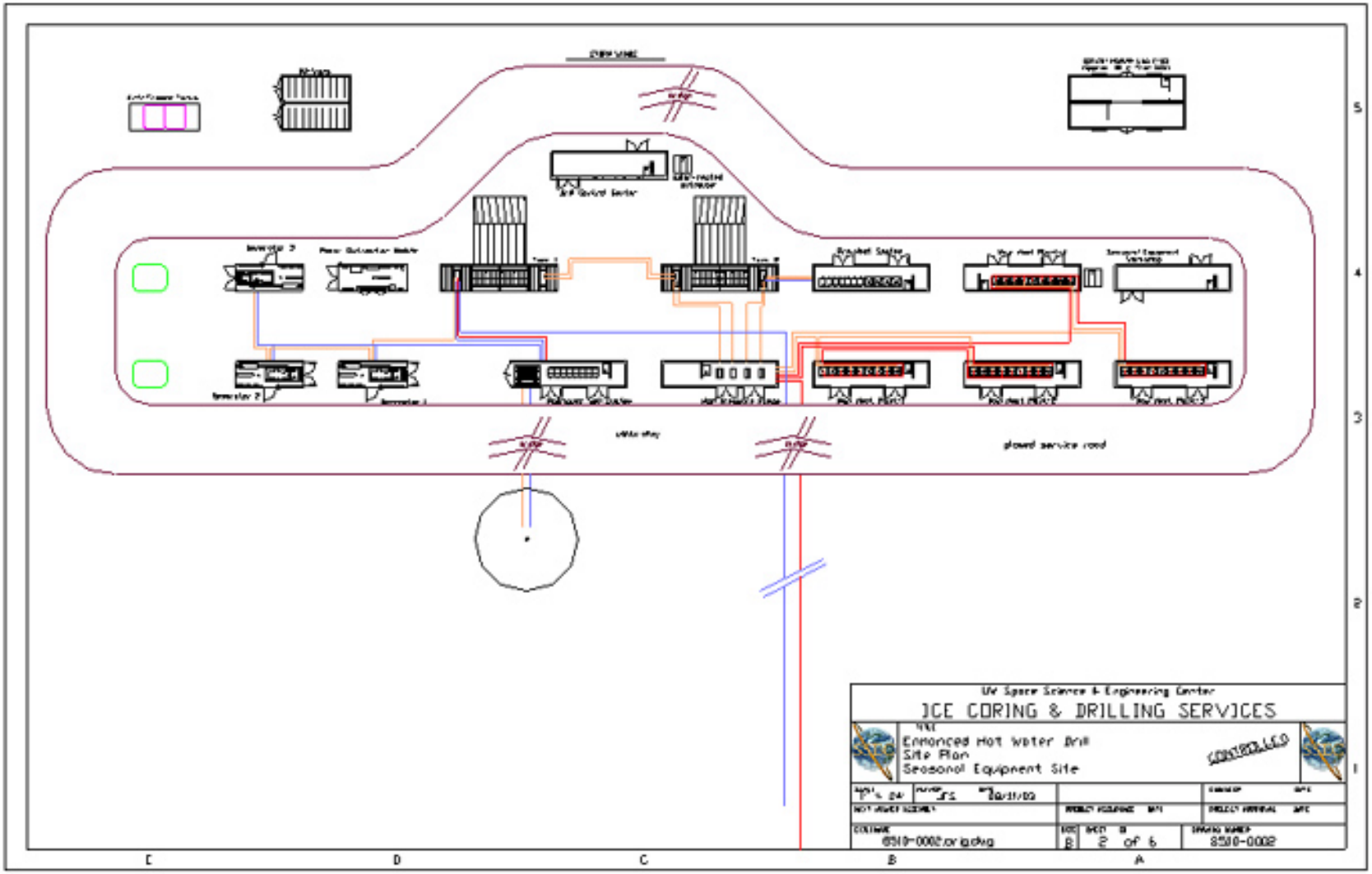

The Seasonal Equipment Site comprises the following major components:

3.3.2.1.2.1 Rodriguez Well System

The Rodriguez Well System (RWS) will contain the structures and equipment needed to create and maintain a subsurface water reservoir. The well is formed by advancing a hole into the snow using the Firn Drill which is then enlarged through the recirculation of heated water to melt the surrounding snow and ice to form a subsurface chamber. The well will provide a continuous source of water needed to supply drilling activities, approximately 61,000 liters per hole drilled. The Rodriguez Well used at the Amundsen-Scott Station typically provides over 20 million liters of water over its life and attains a size of 40 meters in height and 30 meters in diameter with the base 100 meters or more below the surface. The Rodriguez Wells that will be used for Project IceCube will be smaller and will attain a size in proportion to the capacity used.

The RWS module will be placed near each seasonal well, and will contain ten Stinger heaters, hose reel, associated controls and piping needed to circulate the water and pump the water to Water Tank #1. The RWS module will also utilize waste heat recovered from the Seasonal Equipment Site generators. Figure 3-14 presents the plan for the RWS module.

Figure 3-14. Rodriguez Well System Floor Plan

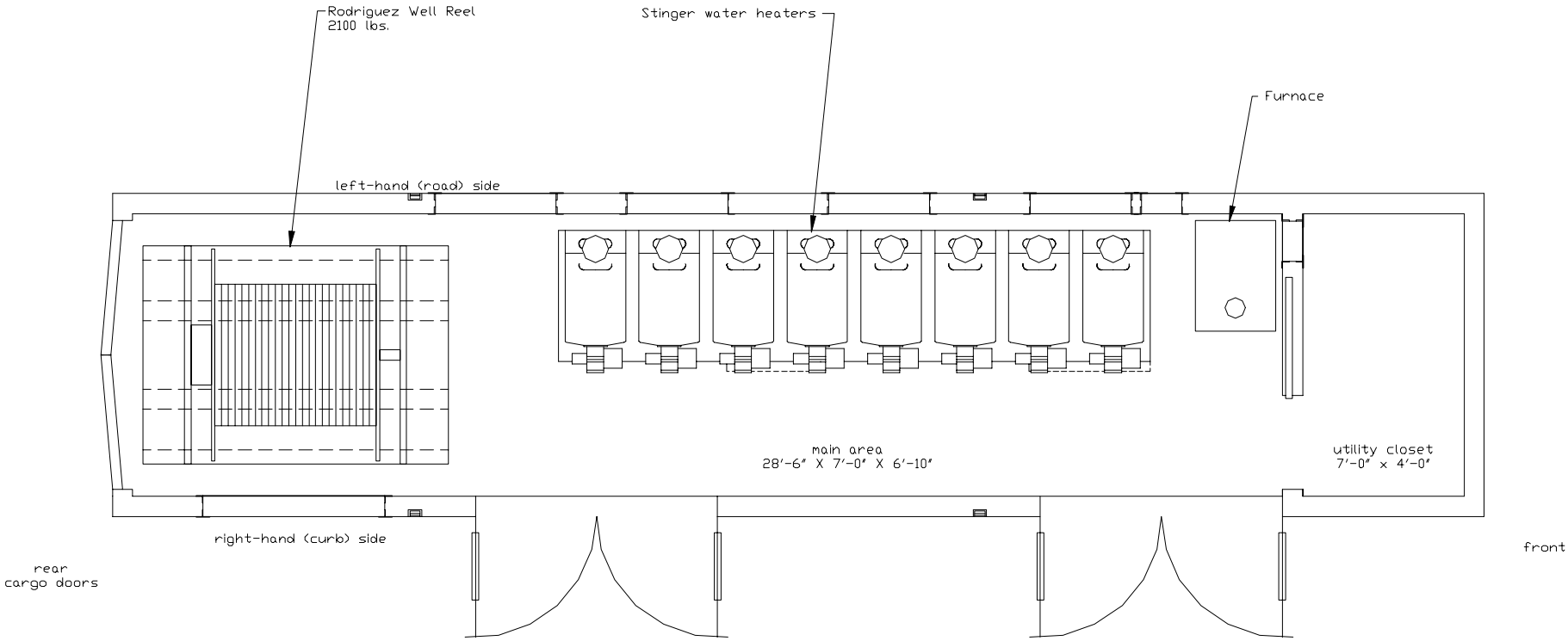

3.3.2.1.2.2 Water Tank No. 1

Water Tank No. 1 will be a modular structure with a nominal capacity of 37,500 liters with associated pumps and plumbing. Water Tank No. 1 will store water obtained from the Rodriguez well and return (i.e., cold) water pumped from the Tower Operations Site approximately 300 meters away. The water temperature in Water Tank No. 1 is expected to be from slightly above freezing to 5^0 C, and will be used to supply Water Tank No 2. Water Tank No 1 will also be used to supply the water used in the IceTop tanks. Figure 3-13 presents a schematic of the Seasonal Equipment Site including Water Tank No. 1.

3.3.2.1.2.3 Pre-Heat System

The Pre-Heat System will provide approximately 15% of the heat required for the drill, and will recirculate water to Water Tank No. 2. The Pre-Heat System will contain seven diesel-fired Stinger water heaters and four Model 75 heaters and associated piping mounted inside a heated modular structure. The Pre-Heating System will provide enough heat generating capacity to increase the water from near freezing to 24^0 C, at a rate of 750 liters per minute. Figure 3-13 presents a schematic of the Seasonal Equipment Site including the Pre-Heat System module.

3.3.2.1.2.4 Water Tank No. 2

Water Tank No. 2 will be a modular structure with a nominal capacity of 37,500 liters. Water Tank No. 2 will receive water from Water Tank No. 1 and will circulate water to the Pre-Heat System. Figure 3-13 presents a schematic of the Seasonal Equipment Site including Water Tank No. 2.

3.3.2.1.2.5 High Pressure Pumps

The High Pressure Pump (HPP) subsystem will deliver water from Water Tank No. 2 to the four Main Heat Plants and will be housed inside a heated modular structure. The HPP will contain 4 electric-powered positive displacement pumps and associated piping. Each pump will be capable of delivering 200 liters of water per minute at 67 kilograms per square centimeter of pressure. Figure 3-13 presents a schematic of the Seasonal Equipment Site including the HPP system.

3.3.2.1.2.6 Main Heat Plant

The Main Heat Plants (MHP) will provide approximately 73% of the heat required for the drill system. There are 4 identical MHPs each containing 9 diesel-fired water heaters (Model 75s). The water for the MHPs is supplied from Water Tank 2 via the HPP. Each MHP will be capable of heating approximately 200 liters of water per minute from 24^oC to 88^oC. The heated water will be circulated to the Supply Hose Reel at the Tower Operations Site. Figure 3-15 presents the plan for each of the 4 Main Heat Plants.

Figure 3-15. Main Heat Plant Floor Plan

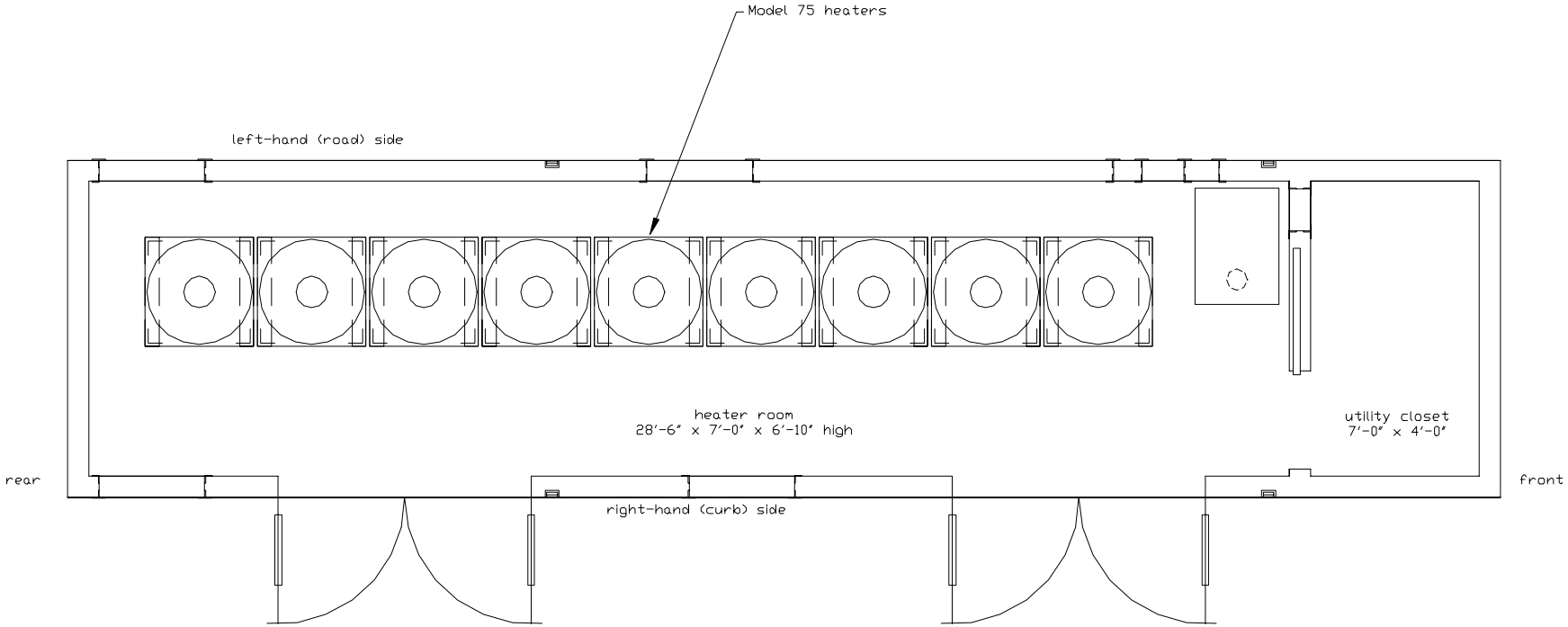

3.3.2.1.2.7 Seasonal Equipment Workshop

The Seasonal Equipment Workshop (SEW) will be housed inside a heated modular structure containing a work area for equipment maintenance and repair. Figure 3-13 presents a schematic of the Seasonal Equipment Site including the SEW.

3.3.2.1.2.8 Optical Module Lab

The Optical Module Lab (OML) will be a heated modular structure that will provide a protected work area to prepare the optical modules for deployment. The OML will be located approximately 80 meters from the Seasonal Equipment Site. Figure 3-13 depicts the OML on the Seasonal Equipment Site Layout.

3.3.2.1.2.9 Drill Control Center

The Drill Control Center (DCC) will be housed inside a heated modular structure and will contain the computers, controllers, and operators needed to manage drilling activities. Figure 3-13 presents a schematic of the Seasonal Equipment Site including the DCC.

3.3.2.1.2.10 Generators

Power will be provided by a series of diesel generators that will deliver 450kW of power during drilling operations. It is anticipated that there will be three 225kW generators, two of which will be in service and one will be on standby.

It is anticipated that the new diesel generators will be fuel-efficient, providing approximately 3.2 kW-hr of electricity per liter of fuel. In addition, waste heat will be recovered from the generators and will be supplied to the Rodriguez Well Systems. Figure 3-13 presents a schematic of the Seasonal Equipment Site including the Generators.

3.3.2.1.2.11 Milvans (Storage)

Two milvans mounted on sleds will be obtained from Amundsen-Scott Station stocks and staged at the Seasonal Equipment Site. The milvans will be used for storage and temporary workshop space. Figure 3-13 presents a schematic of the Seasonal Equipment Site including the Milvans.

3.3.2.1.2.12 Fuel Storage and Distribution System

Fuel is a critical resource needed to support drilling and array deployment activities. A fuel storage and distribution system consisting of series of fuel storage tanks and associated distribution lines will be installed at the Seasonal Equipment site to provide a continuous supply of fuel for the power plant, heating plant, and other equipment. The fuel system will incorporate spill containment structures (e.g., double-walled tanks) and spill detection systems (e.g., flow sensors, alarms) to prevent spills to the surrounding environment. Figure 3-16 presents a schematic of the Seasonal Equipment Site including the fuel distribution system.

The main fuel supply will be contained in two 19,000-liter double-walled steel tank mounted on sleds. These tanks will be used alternately to supply fuel to individual structures using a series of fuel lines. As-needed, one of the main fuel tanks will be transported to the Amundsen Scott Station's fuel supply to be refilled while the second tank is used as the main supply. The fuel tanks will be equipped with level sensors and the fuel lines will be equipped with a series of flow sensors to detect fuel loss conditions indicative of fuel leaks (Figure 3-16).

The buildings at the Tower Operations Site will be equipped with smaller tanks (e.g., 1,900 liters) to supply fuel to the space heaters. The TOS tanks as well as heavy equipment and vehicles (e.g., bulldozers, forklift, crane) will be refueled via mobile delivery.

Figure 3-16. Seasonal Equipment Site Fuel Storage and Distribution

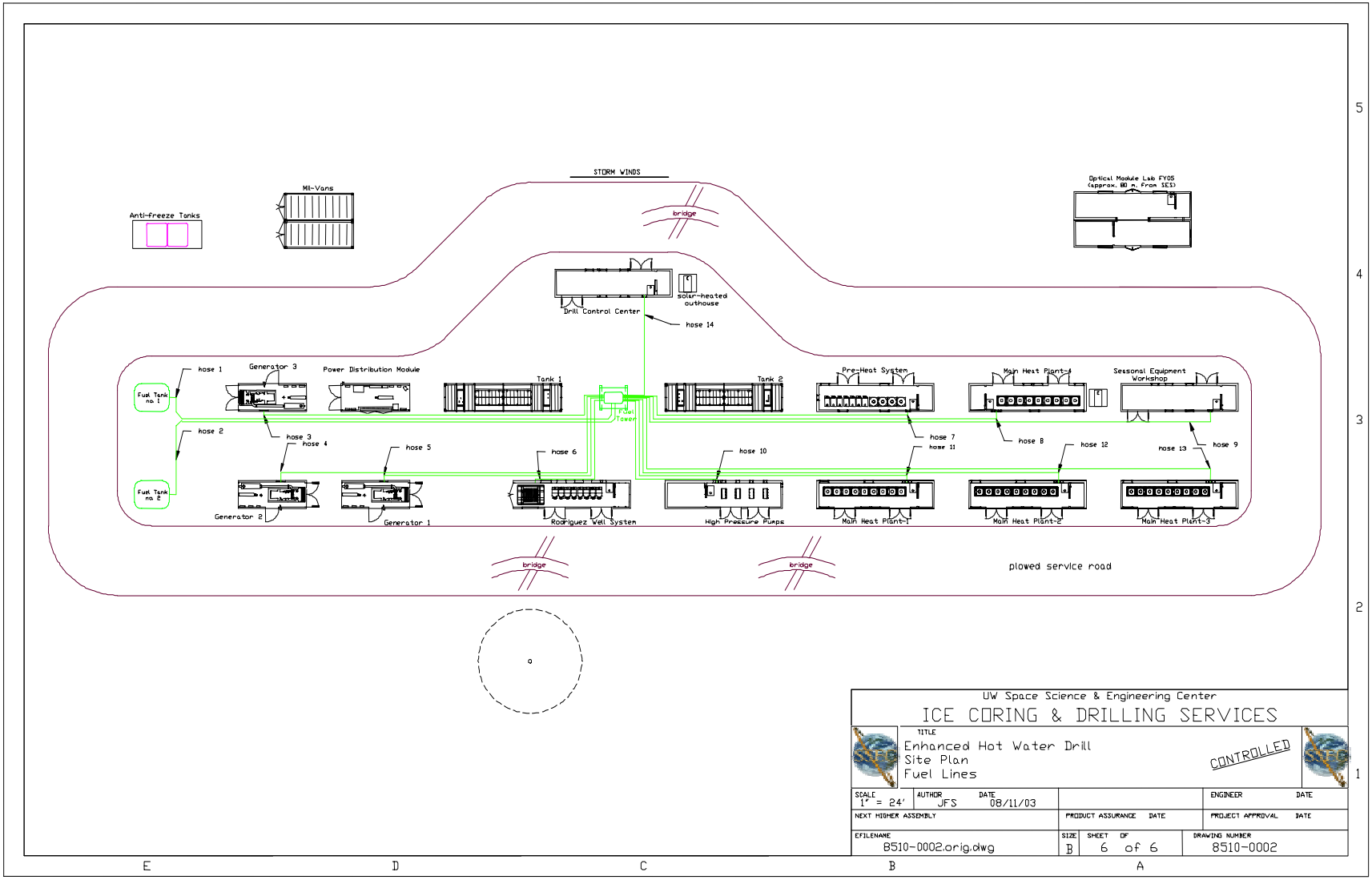

3.3.2.2 Drilling Activities

Project IceCube drilling activities have been carefully planned to prepare holes for the deployment of the deep array in the most efficient means possible. Because of the extreme conditions at the South Pole, drilling and array deployment activities are limited to the austral summer operating season, typically 108 days (November through February). It is expected that drilling activities will take place over six operating seasons. The actual deployment sequence may vary due to operational or logistical limitations, weather, or other factors. The proposed Project IceCube schedule calls for equipment staging and preparation in year 1, followed by installation of 4 strings in year 2, 12 strings in year 3, and 16 in years 4, 5, 6 and 7. Figure 3-17 illustrates the proposed array pattern on a site map.

The Tower Operations Site and Seasonal Equipment Site facilities will be mobilized and demobilized each season, and will be located within 300 meters of the proposed drilling sites. It is expected that mobilization will take place over a period of 21 days, and include assembly and placement of structures, heating systems, and installation of a new Rodriguez Well. Because the startup of the drilling system will require 7,600 liters of water at the beginning of each season's activities and prior to installation of the Rodriguez Well, it is expected that this "seed" water will be obtained from the Amundsen-Scott Station.

Drilling activities will proceed on a 24-hour per day basis for approximately 59 days each year. It is estimated that 18 of the 46 dedicated Project personnel will support drilling activities each austral summer during the six year drilling period. Two separate Tower Operations Structures (TOS) are expected to be used simultaneously during drilling operations to minimize the setup time required to initiate drilling activities at each hole. For example, one TOS will be used to deploy the string at a previously drilled hole while a second TOS will be setup at the next location. Figure 3-18 depicts a typical scenario utilizing two TOS units.

Figure 3-17. Project IceCube Array Pattern

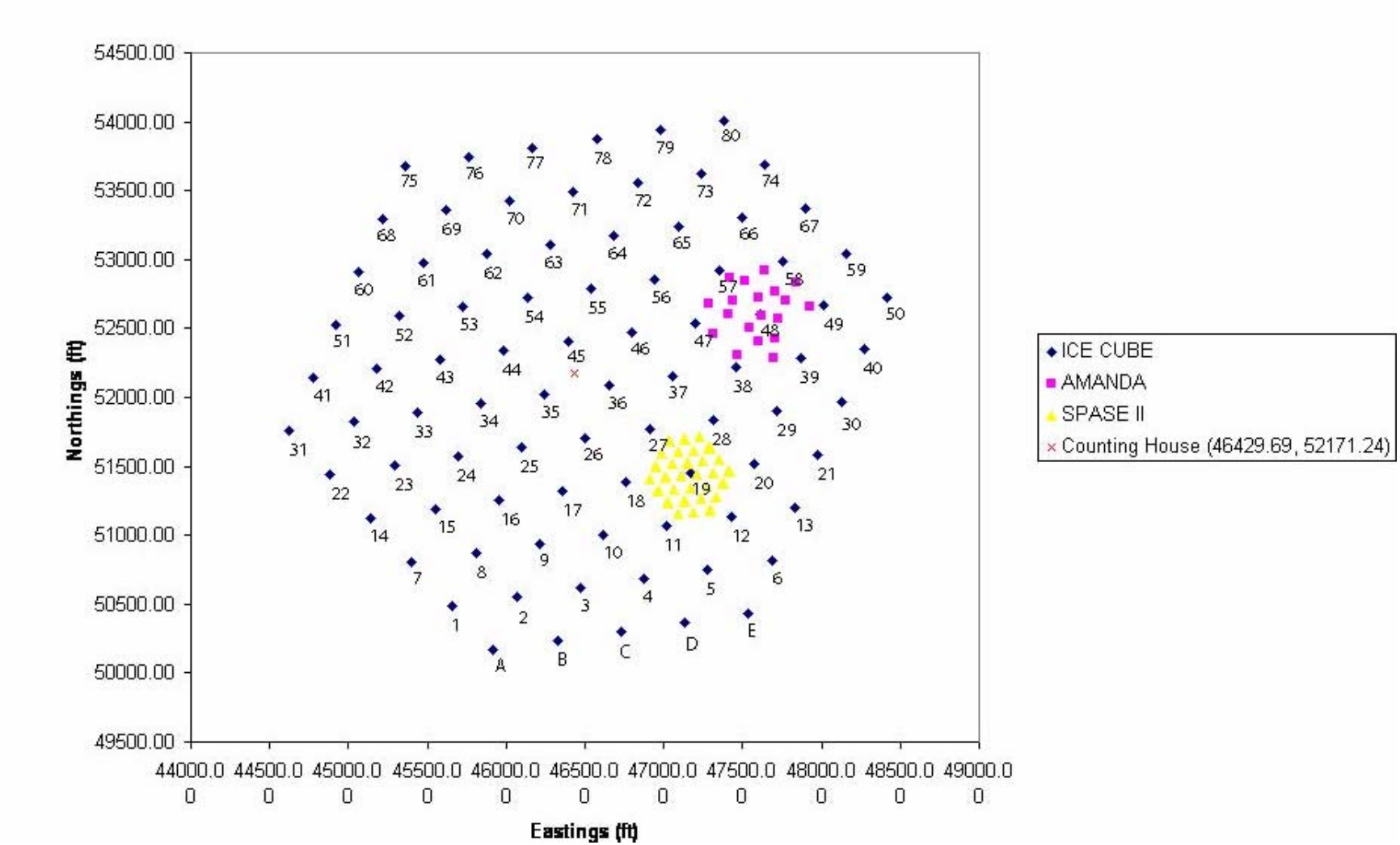

Figure 3-18. Typical TOS Operations

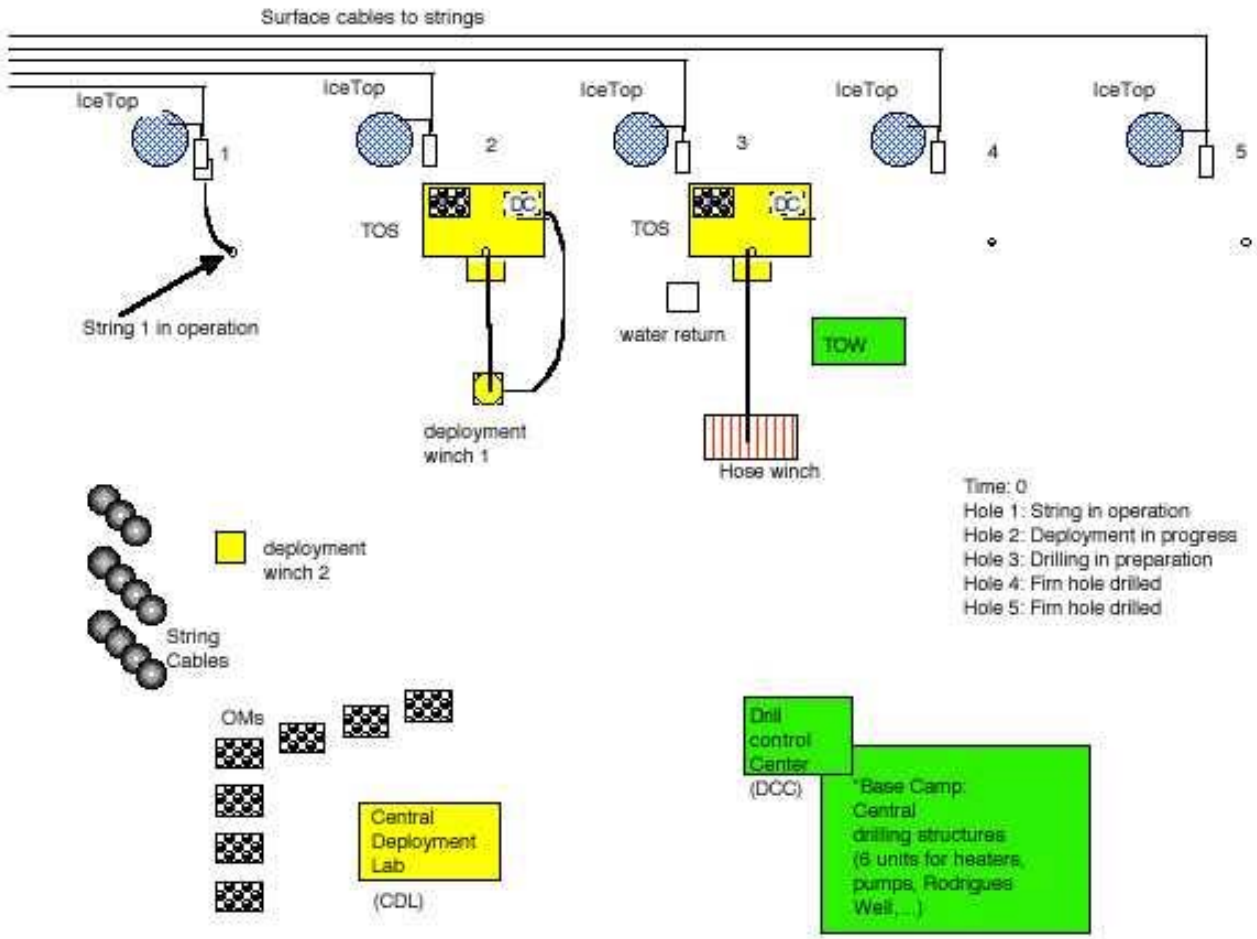

Drilling activities including TOS preparation will be performed over an average duration of 84 hours per hole, allowing up to an estimated 16 holes per operating season. The Firn Drill will be used to initiate the holes at each location and will be used to advance the hole to the point where water begins to pool on top of the polar ice cap, expected to be a depth of 9 meters or less. Deep drilling will typically advance at a rate of approximately 1.5 meters per minute, yielding a hole to the desired 2,450 meter depth over a period of 40 hours. As it is drilled, the hole will contain hot water and will be recirculated to keep the hole open. It is anticipated that approximately 83,000 liters of water per hole will be used from the Rodriguez Well over the duration of drilling activities.

Shortly after drilling activities are completed at a particular deep detector hole location, a pair of IceTop tanks will be installed near the surface. Excavation equipment will be used to create the holes for the IceTop tanks and after the tanks have been installed they will be filled with hot water in preparation for the DOM deployment.

Once drilling activities are completed each austral summer, the Tower Operations Site and Seasonal Equipment Site facilities will be demobilized over a period of 10 days and will include winterization of the structures, disassembly of drilling, heating, and fuel distribution systems, and placement of selected equipment on a raised berm for storage over the austral winter. The water hoses and tanks will be drained and completely dried using a stream of compressed hot air to protect them from freezing damage.

3.3.2.3 Array Deployment

Following completion of drilling activities at each hole, the drill and related equipment will be quickly moved away from the hole to allow for array deployment activities. Each array string will quickly be deployed, aligned, and tested before the water in the hole refreezes. It is anticipated that each string deployment will be completed within a 24-hour period. Assembly and testing of string components will be managed to ensure that the string is ready to be deployed immediately upon completion of drilling activities. It is estimated that up to 16 of the 46 dedicated Project personnel will be required to support array assembly, deployment, and cable installation activities each austral summer during the 6-year drilling and array deployment period.

The Digital Optical Modules (DOMs) will be pre-assembled and tested in the Optical Module Lab, and will be transported to the MDS for final setup and testing prior to deployment. Each OMD is connected electrically to the cable via twisted quad cable breakouts at every fourth DOM position. Each twisted quad cable consists of 2 twisted pairs. Each twisted pair provides 2 DOMs with power and communication from the surface. Because the DOMs are spaced by 17 meters, there will be a breakout of a quad cable every 34 meters. A wiring harness will be used as an interface between the twisted quad breakout on the main cable and the DOM.

Each array string will be lowered to its target depth at a speed of approximately 15 meters per minute. The payout of cable will be measured at the surface, and the payout length and pressure increase at the bottom of the string will be monitored for consistency. Several pressure sensors are used to monitor the correct motion of the string during deployment, and the correct electrical connection of each OMD will be verified at the time of installation. Following testing and verification of string alignment, the string will be allowed to freeze to secure the string in the ice sheet.

3.3.2.4 Surface Cable Installation

Each subsurface cable connecting an array to the Counting House will be placed inside a trench 1 meter deep or greater excavated by a diesel-powered trencher (e.g., Caterpillar Model 277), and covered with snow. It is expected that trenching the cables at this depth will keep them secure for the 15 year

operational service life of the Project. Figure 3-6 depicts the layout of the surface cables from the IceTop tanks to the Counting House.

The surface cables connecting the IceTop tanks to the Counting House will be trenched independent of the drilling or deployment of the array strings. It is anticipated that the surface cable for each array planned for the season will be laid out before the drilling starts. The cables will be trenched from the Counting House, thus avoiding an accumulation of excess cable in its vicinity. Excess cable, if any, will be buried near the IceTop tank. It is expected that the surface cables will have already been connected to the Counting House by the time the corresponding string is deployed, allowing the deployment staff to establish electrical connectivity to the string the string within hours after it is connected to the surface cable near the IceTop tanks.

Subsurface cables containing electrical and communications links connecting the Counting House to the main Station will also be installed during the Project. Similar to the array cable installation, these cables will be placed inside a trench 1 meter deep using a diesel-powered trenching system. Once the cables are buried in their trenches, vehicle traffic across the cable routings will be possible and will not cause any damage.

3.3.3 Data Management

Data from the Project IceCube sensors will be selected, reconstructed, filtered, and analyzed to achieve the scientific goals of the project. The software used includes firmware deep in the ice, through the DAQ, to Data Handling framework, and finally into the analysis.

The location of Project IceCube at the South Pole places special demands on what would otherwise be a straightforward software system. First, the Data Handling software must provide robust, fast and accurate filtering of the data in an essentially online environment. This is because Project IceCube's high data rate from downgoing muons results in a large data volume in spite of a small individual event size, and the satellite bandwidth for uploading data to the northern hemisphere is much too small to permit full raw data transfers. Second, the harsh environment of the South Pole and its inaccessibility for about nearly 3/4 of the year mean that winter-over personnel will maintain the detector. Since winter-over personnel will often not have expertise in all aspects of the detector, the interfaces used to control and monitor the Data Handling system at the Pole must be simple, user friendly, and the associated computing hardware systems must be reliable and fault-tolerant.

A detailed technical description of the components of the proposed data management system for Project IceCube, including the hardware and software, data distribution, offline data flow, and data handling requirements can be found in the *IceCube Preliminary Design Document*, Revision: 1.24 and may be viewed at http://icecube.wisc.edu//reviews_and_meetings/Oct2001_hartill/Prelim_Design_Doc/PDD.pdf

3.4 Nature and Intensity of Proposed Activities

This section describes the activities that will be performed for Project IceCube and represents the preferred alternative whereby Project IceCube is supported primarily by the Amundsen-Scott Station. The high-energy neutrino telescope proposed for Project IceCube at the South Pole will be installed in years 1 though 7 and operated in year 8 and beyond. The telescope will contain 5,120 optical modules arranged in a deep and surface array of 80 vertical strings to view a cubic kilometer of ice in the polar ice sheet. The array will be located approximately 0.5 kilometers from the Amundsen-Scott Station (Figure 3-1).

The proposed activities to support Project IceCube include drilling and array deployment, science support activities, fuel and material management , personnel support, and waste management, and other services, and utilize resources dedicated to the Project as well as operational resources provided by the Amundsen-Scott Station. The proposed Project activities and the associated support resources having the potential to yield impacts to the Antarctic environment are described in the following sections.

3.4.1 Drilling and Array Deployment

The proposed Project scientific components, drilling and array deployment activities, schedule, and duration were described in detail in Section 3.3 and are summarized in Table 3-1. Drilling and array deployment activities will occur over a 6-year period, and will utilize up to 46 of the dedicated Project staff each year as well as additional support staff from the Amundsen-Scott Station.

Table 3-1. Summary of Drilling and Array Deployment Activities During Project IceCube

Project Year	Mobilization & Demobilization (days)	Drilling & Array Deployment (days)	Drilling Activities		Array Deployment		
			No. of Deep Array Holes [1]	No. of IceTop Tanks [2]	No. of Array Strings	No. of DOMs [3]	Length of Cable (meters)
1	0	0	0	0	0	0	0
2	31	15	4	8	4	256	13,680
3	31	44	12	24	12	768	41,040
4	31	59	16	32	16	1,024	54,720
5	31	59	16	32	16	1,024	54,720
6	31	59	16	32	16	1,024	54,720
7	31	59	16	32	16	1,024	54,720
8+	0	0	0	0	0	0	0
Total	186	295	80	160	80	5,120	273,600

NOTES: DOM = Digital Optical Module
[1] Each deep array hole will be 60 cm in diameter and 2,450 m in depth.
[2] Each IceTop tanks will be 3.6 m^2 in area and 1 m in depth.
[3] Each DOM is 33 centimeters in diameter and contains an optical sensor, electronic circuit board, HV generator, flasher board, magnetic shield, glass pressure housing, and optical silicone gel.

3.4.2 Science Support Activities

A number of operational resources will be needed to support the Project, including operation of dedicated science facilities, power generation, IT support, and satellite upload support. These resources are described below.

3.4.2.1 Operation of Dedicated Facilities

A science facility will be needed to support Project IceCube activities to house the instrumentation used for data collection and processing from the Project array. This facility will be known as the Counting House, and will be centrally located within the array pattern (Figure 3-9). The Counting House will be connected to the array via subsurface cables.

The Optical Module Lab (OML) will serve as the temporary Counting House for the first two years of the Project and will process data from the estimated 4 array strings that will be deployed during that period.

The former elevated dorm at the Amundsen-Scott Station (Figure 3-19) will be renovated and will serve as the Counting House beginning in Year 3 of the Project. This building is mounted on supports above the snow surface which prevents blowing snow from accumulating around the structure and minimizes the efforts required for snow removal and maintenance. In addition, the structure is equipped with solar panels to minimize the heating requirements.

Figure 3-19. Elevated Dorm

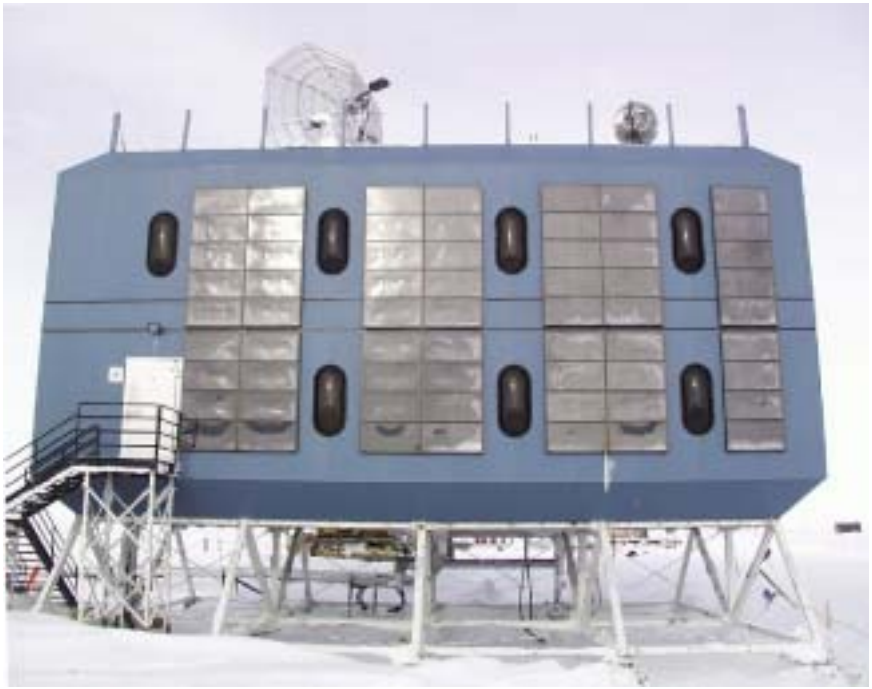

The Counting House will be operated for the duration of the Project and will require support from the Amundsen-Scott Station for heating fuel, cleaning, and maintenance.

3.4.2.2 Power Generation

The Amundsen-Scott Station will provide the staff and resources to operate and maintain the power plant at the Seasonal Equipment Site during the drilling period of the Project. The Project power plant will generate up to 450 kW of power through the use of two of three 225kW generators maintained on the site. Following completion of drilling and array deployment activities, electrical power required at the Project site will be limited to the electricity needed to support activities performed in the Counting House and will be provided by the Amundsen-Scott Station. Electric supply cables will be routed from the Station to the Counting House and will be placed below the snow surface.

3.4.2.3 Information Technology

The Project data management activities will require use of the Amundsen-Scott Station local area network (LAN) and internet connectivity. The computer network consists of a central server, distributed desktop computers, 10Mbs ethernet and 100 Mbs FDDI local area network (LAN). This LAN provides centralized electronic, mail, user applications, and data archiving and distribution services which are connected to the USAP network and Internet via the TRSS satellite services. The distribution system consists of fiber optic, twisted cable, and thicknet/thinnet ethernet cable systems.

3.4.2.4 Communications and Data Transfer

The Project data management activities will require a satellite link to facilitate data upload. The existing satellite communications and data transfer resources (i.e., TRSS satellite) at the Amundsen-Scott Station will be utilized. The data transfer requirements for Project IceCube can be met with the current TDRS F1 satellite and the planned earth station facilities under SPSM; however, should the satellite exhibit an unexpected failure, alternate communications and data transfer options will be identified and selected. It is anticipated that any additional communications resources at the South Pole will be identified and the associated environmental effects evaluated as-needed under a separate effort.

3.4.3 Personnel Support Activities

Operation of berthing, food services, water, toilet facilities, and associated utilities, maintenance, repair, and cleaning services will be required to support dedicated Project staff at the South Pole for the duration of the Project. These services will be provided through the available resources at the Amundsen-Scott Station. In addition, toilet, meal and break facilities will be provided at the Project site to support personnel during the drilling and array deployment operations. Table 3-2 summarizes the dedicated Project staffing for the austral summer and austral winter and also presents the total number of person-days each year of the Project. During drilling activities in year 2 through year 7, dedicated Project staff housed at the Station during the austral summer will include scientists, drillers, deployment specialists, and technicians. Staff supporting the Project during the austral winter during years 2 through 7 and during data collection operations in years 8 and beyond will be limited to scientists and technicians performing data collection, analysis, and systems maintenance activities.

Table 3-2. Project IceCube Staffing Plan

Project Year	Austral Summer (108 days)		Austral Winter (257 days)	
	People	Person-days	People	Person-days
1	20	2,160	0	0
2	59	6,372	12	3,084
3	58	6,264	4	1,028
4	58	6,264	3	771
5	58	6,264	3	771
6	58	6,264	3	771
7	58	6,264	3	771
8+	12	1,296	3	771

Additional staff will be needed to mobilize, operate, maintain, demobilize, and winterize facilities and selected Project operations (e.g., power plant operation, equipment operation, waste management, materials handling). It is expected that these personnel will consist of Amundsen-Scott Station personnel assigned to support the Project on an as-needed basis and therefore, will not require additional personnel support facilities.

3.4.4 Logistics Support – Transportation to the South Pole

All materials dedicated to Project IceCube, including drilling equipment, Tower Operations Site and Seasonal Equipment Site facilities, heavy equipment and vehicles, fuel, science cargo, and operational cargo, will be transported to the South Pole using several existing transportation systems. Table 3-3

summarizes the Project logistical requirements, expressed as cargo weight including fuel, for each year of the Project.

Table 3-3. Estimated Logistics Support Requirements for Project IceCube

Project Year	Materials/Supplies Required (kg)	Number of LC-130 Flights Required [1]
1	472,000	40
2	649,000	55
3	613,600	52
4	684,400	58
5	708,000	60
6	708,000	60
7	542,800	46
8	47,200	4
9+	0	0
TOTAL	4,425,000	375

NOTE: [1] Each flight has the capacity to transport 11,800 kg of cargo or 14,500 liters of fuel.

3.4.4.1 Delivery of Project Materials to McMurdo Station via Vessels, C-141 Aircraft

All materials equipment, and fuel destined for Project IceCube will first be transported to McMurdo Station where they will be staged for subsequent shipment to the South Pole. Project materials will initially be transported to McMurdo Station using existing USAP logistical support systems, including an annual resupply vessel, C-17, C-141, or C-130 aircraft.

The fuel required to support Project IceCube will be obtained from the bulk supply maintained at McMurdo Station and resupplied each year by a fuel tanker. The majority of cargo needed to support the Project will be transported to McMurdo via the annual resupply vessel. However, to support the proposed drilling and array deployment schedule, it is anticipated that a total of 13 dedicated C-141 flights will be needed to transport cargo to McMurdo Station during year 1 of the Project.

3.4.4.2 Delivery of Project Materials to the South Pole via LC-130 Aircraft

Project materials, equipment, and fuel as well as Project staff will be transported from McMurdo Station to the South Pole using the existing USAP logistical support system, i.e., LC-130 aircraft. The LC-130 aircraft has a capability to transport up to 11,800 kilograms of cargo or 14,500 liters of fuel per flight. Table 3-3 summarizes the logistical requirements for the delivery of Project materials to the South Pole, expressed as cargo weight and the associated number of LC-130 flights, for each year of the Project.

3.4.4.3 Delivery of Project Materials to the South Pole via Overland Traverse

Overland traverse capabilities from McMurdo Station to the South Pole are not currently available, but the feasibility of an overland traverse to transport supplies to the Amundsen-Scott Station is currently being investigated as a proof of concept study. In 2005, during the final year of the study, fuel may be delivered to the South Pole. Assuming the results of the proof of concept study indicate that overland traverse is a practical and viable method of transport, the USAP may elect to develop and implement

these capabilities to supplement airlift resources for the resupply of the Amundsen-Scott Station. Depending on Project IceCube needs at the time, the overland traverse capability may be used to transport some of the fuel and other cargo needed to support the Project.

3.4.5 Logistics Support – Equipment and Services

Logistics support at the Project site will be needed for a variety of activities, including the setup and transport of the Tower Operations Site and Seasonal Equipment Site components, preparation of access pathways and cable trenches, and the transport of fuel, materials, and personnel. Logistics support will be provided through dedicated Project resources and services provided by the Amundsen-Scott Station and will consist of heavy equipment (e.g., bulldozers), vehicles (e.g., vans, snowmobiles), ancillary equipment (e.g., chainsaws, portable drills), and other associated resources such as equipment repair, welding, or material fabrication, and is described below.

3.4.5.1 Heavy Equipment

Once Project materials are transported to the South Pole, heavy equipment such as bulldozers, forklifts, loaders, cranes, and trenching equipment will be needed to handle these materials. This equipment will be used for the delivery of cargo, equipment, and fuel, installation of Project support facilities, preparation of snow roads and facility or cargo berms, and deployment of the Project array and related cables.

Three pieces of heavy equipment will be procured and dedicated to the Project, including one D7 bulldozer, one forklift, and one trencher. Additional heavy equipment and operators will be obtained as-needed from available Amundsen-Scott Station resources.

3.4.5.2 Vehicles

Logistical support to Project activities will also consist of vehicles (e.g., trucks, vans, snowmobiles) needed to transport Project staff and materials between various Project facilities and the Amundsen-Scott Station. One van will be procured and dedicated to the Project. It is expected that additional vehicles and any associated operators will be obtained on an as-needed basis from available Amundsen-Scott Station resources.

3.4.5.3 Other

Other logistical support resources will be needed on an intermittent basis over the course of the Project, including vehicle and equipment maintenance and repair, snow removal and maintenance. As additional logistical or construction services are needed, such as welding, material fabrication, or installation or maintenance of electrical, plumbing, or mechanical components, they will be provided by the Amundsen-Scott Station.

3.4.6 Fuel Management

Petroleum hydrocarbon fuels (e.g., diesel, gasoline) are a critical component needed to support Project activities. Table 3-4 presents the projected amount of fuel required each year of the Project. Fuel will be required to operate drilling equipment, heavy equipment and vehicles, generate electricity, and heat facilities. The primary fuel used will be diesel fuel (e.g., AN-8), but some gasoline will be used for snowmobiles or small pieces of equipment such as chainsaws or portable drills. Specific activities related to fuel management are discussed below.

Table 3-4. Estimated Fuel Consumption for Project IceCube

Project Year	No. of Strings Deployed	Diesel (liters)			Gasoline (liters)	Total
		Power Generation & Water Production	Space & Water Heating	Equipment and Vehicles	Equipment and Vehicle	
1	0	0	0	16,632	1,000	**17,632**
2	4	30,250	87,120	3,630	2,000	**123,000**
3	12	90,750	261,360	10,890	2,000	**365,000**
4	16	121,000	348,480	14,520	2,000	**486,000**
5	16	121,000	348,480	14,520	2,000	**486,000**
6	16	121,000	348,480	14,520	2,000	**486,000**
7	16	121,000	348,480	14,520	2,000	**486,000**
8+	0	0	11,340	1,134	200	**12,674**

3.4.6.1 Fuel Delivery

Fuel needed to support Project IceCube activities will be delivered to the South Pole via LC-130 aircraft. If overland traverse capabilities are developed by the USAP in 2006 and later, fuel may also be delivered to the Project by the traverse. It is expected that fuel needed for the Project will be delivered to the South Pole each year of the projected six-year installation period.

Fuel will be transferred to the Seasonal Equipment Site from the main Station using two dedicated 19,000-liter sled-mounted bulk fuel tanks. As-needed, one these mobile tanks will be transported to the Station's fuel arch for refilling, while the second tank is used to supply the Seasonal Equipment Site. It is anticipated that fuel will be resupplied to these bulk storage tank multiple times during the course of an operating season depending on the number of holes drilled in the ice sheet and equipped with detector strings.

Fuel will be further distributed to the structures in the Seasonal Equipment Site structures using a fuel tower and series of pipelines and hoses (Figure 3-16). Fuel will be distributed to individual tanks in the Tower Operations Site, the Counting House, and to heavy equipment and vehicles via mobile delivery equipment.

3.4.6.2 Fuel Storage

Fuel will be stored in multiple tanks at the Tower Operations and Seasonal Equipment Sites. Where practical, fuel tank will be designed and constructed to include secondary containment features (e.g., double-walled tanks, drip pans) to prevent accidental spills to the environment. During each operating season, fuel will be conveyed at the Seasonal Equipment Site using fuel distribution lines placed beneath the snow surface. These distribution lines will be equipped with flow sensors that will detect conditions indicative of a fuel leak.

Fuel for the Seasonal Equipment Site will be stored in two bulk 19,000-liter double-walled tanks (Figure 3-16) which will be refilled as-needed from the tanks at the main Station. Fuel will also be smaller tanks (i.e., <1,900 liters) located at individual Tower Operations Site structures. Gasoline will be stored in 200-liter drums. Up to a total of 50,000 liters of fuel may be stored at the Project site at any given time.

At the completion of activities each operating season, the fuel distribution lines at the Seasonal Equipment Site will be drained and secured for storage during the austral winter. Bulk and individual fuel tanks will be secured for storage over the austral winter and reuse the following season.

3.4.6.3 Fuel Use

Projected fuel use for all dedicated Project activities has been carefully calculated based on the electrical, heating, and equipment requirements of the drilling activities, and array deployment. The projected fuel use also accounts for fuel savings realized by waste heat recovered from the electrical generators. Table 3-4 summarizes the total amount of fuel that will be used for activities at the Tower Operations and Seasonal Equipment Sites including power generation, heating, water production (i.e., Rodriguez Well), and equipment operation for the Project, and provide an estimate of the amount of fuel used each year based on the proposed drilling schedule. The projection excludes fuel that is used in equipment that is normally used to support other activities at the Amundsen-Scott Station but may be used intermittently to support Project IceCube.

3.4.7 Materials Management

In addition to fuel, materials and supplies will be needed to support Project drilling, array deployment, and personnel support services, and include scientific instrumentation, cables, spare parts, food, construction and maintenance materials, and consumable supplies. These materials will be stored and handled in a manner to protect their contents and prevent their release to the environment.

The majority of materials needed to support drilling and array deployment activities will be stored at the Seasonal Equipment Site and kept in the two milvans (Figure 3-13) or within the individual buildings. Scientific components, such as DOMs or string cables, or drilling supplies may be placed on pallets and stored in outdoor cargo lines on groomed areas of the snow surface to prevent them from becoming encrusted in snow or ice and becoming lost or irretrievable. Additional stocks of materials may be stored in cargo lines maintained at the Amundsen-Scott Station.

Materials or substances containing chemical components listed by source, chemical name, or hazard characteristics have been identified by the USAP as *Designated Pollutants.* Designated Pollutants are materials with the potential to harm the Antarctic environment, if released and require specific handling and storage procedures. Designated Pollutants are regulated by the NSF Waste Regulation (45 CFR §671) and authorized by the *USAP Master Permit* (reference 3) issued to Raytheon Polar Services Company (RPSC), NSF's civilian support contractor. Designated Pollutants typically used in the USAP include materials such as fuel, adhesives and cements, batteries, chemicals, cleaners and detergents, compressed gas, disinfectants, fire extinguishers and agents, glycol, refrigerants, solvents, paints & thinners, oil & lubricants, sealants and waxes.

The types and quantities of Designated Pollutants that will be used to support Project IceCube will be identified and reported in documentation for the USAP Master Permit. In addition, Material Safety Data Sheets (MSDS) for materials containing Designated Pollutants will be maintained onsite. Fuel is the primary Designated Pollutant that will be used by the Project. Antifreeze (i.e., glycol) is another Designated Pollutant that will be used in significant quantities at the Project site.

Lubricants, solvents, sealants, battery acid, and other industrial chemicals (e.g., cleaners) will also be used in relatively small quantities for the operation and maintenance of Project equipment. The Designated Pollutant materials will be stored and transported in containers of sufficient structural integrity to protect their contents (e.g., 208-liter drums). These materials will be stored in either the storage milvans or will

be placed on pallets and stored in cargo berms at the Seasonal Equipment Site (Figure 3-13). Smaller quantities may be stored in work areas (e.g., workshop, lab) where these materials may be used.

3.4.8 Waste Management

Wastes such as nonhazardous solid wastes, hazardous wastes, and wastewater consisting of sewage and domestic liquid wastes will be generated as a result of Project activities. Resources needed to properly manage solid and hazardous wastes include containers for packaging, storage areas, personnel to manage the material, and resources needed to transport the wastes to McMurdo Station for further processing and retrograde. Wastes from Project activities will be managed using available Amundsen-Scott Station waste management resources. Table 3-5 summarizes the amount of wastes expected to be generated by Project-related activities each year, including wastes generated as a result of personnel support functions.

Table 3-5. Projected Waste Generation for Project IceCube

Project Year	Nonhazardous Solid Waste (kg)	Hazardous Waste (kg)	Total (kg)
1	26,000	1,500	27,500
2	56,700	1,500	58,200
3	43,800	2,250	46,050
4	42,200	2,250	44,450
5	42,200	2,250	44,450
6	42,200	2,250	44,450
7	42,200	2,250	44,450
8+	12,400	0	12,400

3.4.8.1 Solid Waste

Construction, drilling, and personnel support activities will generate various types of nonhazardous solid wastes which will be retrograded to the United States and either recycled, disposed, or incinerated. The quantity of waste expected to be generated by Project activities (Table 3-5) reflects specific waste minimization procedures that have been incorporated into the design of the Project, including reusable packing materials, permanent bracing in structures rather than temporary or removable, and the reuse of wood used for crating.

It is expected that solid wastes generated from Project activities will be collected at several locations in the Tower Operations and Seasonal Equipment Sites and at personnel support facilities operated at the Station. Consistent with current USAP waste management practices, solid wastes will be segregated at the source and will be accumulated in containers appropriate to contain the wastes (e.g., drums, crates, triwall corrugated containers).

Containers of solid wastes from Project activities will be transferred to waste management facilities maintained at the Amundsen-Scott Station for subsequent packaging and transport to McMurdo Station. All wastes generated at the Project site and transferred to the Amundsen-Scott Station will be tracked to identify the volume of wastes and to verify their disposition.

3.4.8.2 Hazardous Waste

Hazardous wastes such as used oil, lubricants, glycol, and associated contaminated debris are expected to be generated on a routine basis as a result of periodic maintenance performed on the drilling and other

Project equipment. Table 3-5 includes the amount of hazardous wastes projected to be generated by Project-related activities. Hazardous wastes may also include contaminated snow generated as a result of the cleanup of fuel or other liquid spills, although the amount of material generated from these unplanned events cannot be projected in advance.

All wastes containing one or more Designated Pollutants have been identified by the USAP as *Antarctic hazardous wastes*. Handling, inspection, and storage of Antarctic hazardous wastes are regulated by the NSF Waste Regulation (45 CFR §671). Consistent with this regulation, Antarctic hazardous wastes will be accumulated in containers of sufficient structural integrity to protect their contents and will be stored in an area to allow access and inspection on a weekly basis. Antarctic hazardous wastes will be collected at designated accumulation areas within the Tower Operations and Seasonal Equipment Sites, as needed. Consistent with the requirements of the NSF Waste Regulation (45 CFR §671), Antarctic hazardous wastes may be stored at the Amundsen-Scott Station for a period not to exceed 15 months, but is expected that Antarctic hazardous wastes will be removed from the South Pole and transported to McMurdo Station at the end of each operating season.

3.4.8.3 Wastewater

Wastewater will be generated as a result of Project activities, including domestic wastewater generated at toilet facilities at the Seasonal Equipment Site and the Counting House. In addition, some greywater containing freshwater (i.e., melted snow) and trace residues of soap and cleaning materials may be generated at the Tower Operations and Seasonal Equipment Sites. All wastewater generated at the Project Site will be containerized for further processing and disposition as a nonhazardous solid waste.

The heaters used to supply the majority of the heat for the drilling water will create a significant volume of condensate, formed in the secondary heat exchanger as the combustion byproducts are cooled. The condensate water will be reused during drilling activities and is expected to make up about 1 percent of the water in each hole.

Wastewater will also be generated from personnel support activities. Wastewater from Project staff will be managed at the Amundsen-Scott Station and accounted as part of the Station's normal operations. Wastewater generated at the Station is routed through heated conveyance systems and discharged into deep ice pits (i.e., sewage bulbs). In general, the amount of wastewater generated is equivalent to the volume of potable water used for berthing, toilet, and food service-related purposes. Based on an estimated water consumption rate of 94.5 liters of water per person per day during the austral summer and 135 liters per person per day during the austral winter, the estimated volume of water consumed by Project IceCube personnel is summarized in Table 3-6.

Table 3-6. Projected Water Use by Project IceCube Personnel

Project Year	Number of Person-days			Water Use (liters)
	Austral Summer (108 days)	Austral Winter (257 days)	Total	
1	2,160	0	2,160	204,120
2	6,372	3,084	9,456	1,021,578
3	6,264	1,028	7,292	731,756
4	6,264	771	7,035	696,804
5	6,264	771	7,035	696,804
6	6,264	771	7,035	696,804
7	6,264	771	7,035	696,804

Table 3-6. Projected Water Use by Project IceCube Personnel

Project Year	Number of Person-days			Water Use (liters)
	Austral Summer (108 days)	Austral Winter (257 days)	Total	
Subtotal	39,852	7,196	47,048	4,744,670
8+	1,296	771	2,067	227,328

3.4.8.4 Emergency Response

Support to the Project will also include emergency services such as medical, fire, and spill response. It is anticipated that resources currently maintained at the Amundsen-Scott Station will be utilized to respond to Project events on an as-needed basis. Because accidental or emergency events are unexpected, their frequency, duration, and composition cannot be predicted.

Response actions for smaller spills are expected to be performed by Project IceCube staff and may include actions in response to releases from intermittent sources, such as drips from vehicles or machinery. A supply of spill response materials will be maintained at the Tower Operations and Seasonal Equipment Sites and Project personnel will be trained in their use.

3.4.8.5 Safety Program and Code Compliance Inspections

Protection of the health and safety of Project personnel is an important parameter that must be maintained over the course of Project IceCube. Because of the nature of drilling activities and the extreme conditions at the South Pole, working and living conditions must be routinely assessed and monitored and corrective actions implemented as necessary to correct any deficiencies.

The Project has developed a safety program and has incorporated a series of safety policies, procedures and practices in the *IceCube Project Safety Manual* (reference 4). The Project Safety Program incorporates comprehensive safety reviews involving hazard analysis and mitigation planning, training, inspection, change review, and associated documentation for all Project activities.

The Project or the Amundsen-Scott Station will provide the staff and resources to implement safety programs for Project activities and perform safety and code compliance inspections at Project facilities, including the Tower Operations Site, Seasonal Equipment Site, and Counting House.

3.4.8.6 Annual Setup and Seasonal Shutdown

Setup (i.e., mobilization), seasonal shutdown (i.e., demobilization) and winterization of the Tower Operations and Seasonal Equipment Sites will occur each year that drilling operations are performed. The Tower Operations and Seasonal Equipment Sites will be mobilized each austral summer season, and will be located within 300 meters of the proposed drilling sites (Figure 3-17). Mobilization is expected to take place on a 24-hour basis over a period of 21 days and will include assembly and placement of structures, heating systems, fuel distribution systems and equipment, electrical cables, and installation of a new Rodriguez Well.

Similarly, demobilization of the Tower Operations and Seasonal Equipment Sites will take place on a 24-hour basis over a period of 10 days and will include the preparation of storage berms, winterization of structures, disassembly of drilling, heating, and fuel distribution systems, and the securing of materials for storage over the austral winter. Fuel drained from supply lines will be transferred to the bulk storage and

smaller fuel tanks and secured for storage. Water hoses and tanks will be drained and dried using compressed air to protect them from freezing damage. As needed to facilitate subsequent recovery, structures and equipment may be placed on the storage berms for winter storage.

4.0 AFFECTED ENVIRONMENT (INITIAL ENVIRONMENTAL STATE)

4.1 Introduction

This chapter describes the affected environment at the South Pole and represents the initial environmental state. For the purposes of this Comprehensive Environmental Evaluation, the affected environment includes the physical environment at the South Pole (Section 4.2), the infrastructure and operations conducted at the Amundsen-Scott Station in the absence of Project IceCube (Section 4.3) which represent baseline conditions, and the scientific research projects being conducted at the South Pole (Section 4.4). The impacts associated with these baseline conditions were previously evaluated in the programmatic Environmental Impact Statement for the United States Antarctic Program. Impacts expected to be realized as a result of Project IceCube will be assessed in terms of these baseline conditions.

4.2 Description of the Environment at the South Pole

The South Pole is situated at 90^0S latitude and located on the Polar Plateau's East Antarctic Ice Sheet at an elevation of 2,850 meters above sea level.

4.2.1 Weather and Climate

The weather at the South Pole is influenced by its location on the Polar Ice Sheet. The high elevation and the gradual sloping ice sheet sloping on the earth's rotational axis provide for a physical environment that yields persistent and predictable winds. The South Pole is located within a persistent polar anticyclone anchored by the elevated continental ice sheet. Atmospheric conditions at the South Pole are decoupled from the passage of weather systems, and as a result surface winds at the South Pole are constant in direction. The average wind speed at the South Pole is typically less than 6 meters per second, with peak winds rarely over 10 meters per second, and a predominant wind direction of approximately 40 degrees E longitude (see Figure 4-1).

The mean annual temperature at the South Pole is -49.3 ºC. Temperatures recorded at the South Pole have ranged from a minimum of -80.6 ºC to a maximum of -13.6 ºC. Mean monthly temperatures range from -60 ºC in July and August to about -28 ºC in December and January.

The South Pole has a desert environment, with approximately 20 centimeters of snowfall per year, a water equivalent of approximately 7 centimeters. Precipitation is either light snow, or more frequently, ice crystals. Accumulation from individual events is difficult to measure because the fresh precipitation is blown about and mixed with existing accumulation.

Figure 4-1. South Pole Wind Rose

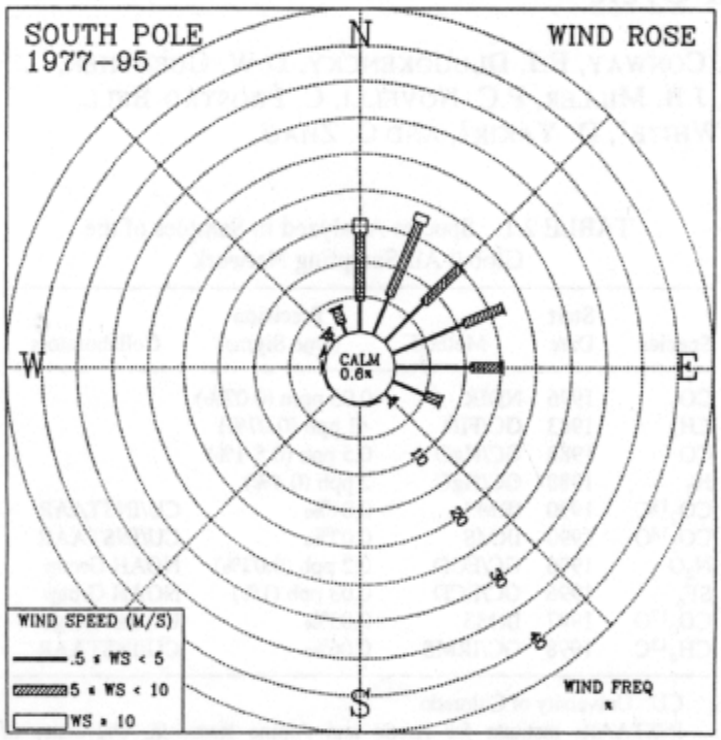

4.2.2 Terrestrial Ice and Snow

The Antarctic ice sheet at the South Pole is approximately 3,000 meters in depth and is a homogenous, sloping, flat surface that is covered with snow. As the snow accumulates in the extremely dry and cold atmosphere, it forms what is referred as a "firn", a very dry form of snow with a mean density near the surface of approximately 0.3 to 0.4 grams per cubic centimeter. The snow compacts with depth until, at approximately 100 meters below the surface, it attains a density of about 0.8 grams per cubic centimeter. As the depth of the polar ice sheet increases as measured from the surface, density increases and many voids are compressed, forming a very clear and uniform mass of ice relatively free of fissures and cracks.

4.2.3 Terrestrial Biota

The Antarctic environment is the least favorable for terrestrial life. The harsh climate and the flat, snow-covered ice sheet at the South Pole do not support local flora or fauna.

4.3 Description of the Amundsen-Scott Station Infrastructure and Operations

The Amundsen-Scott Station is located at the Geographic South Pole (90^0S) and includes numerous buildings, research facilities, and infrastructure in an area of approximately 100 square kilometers. The Station operates year-round and supports a variety of scientific activities, primarily in the fields of aeronomy and astrophysics, ocean and climate systems, and geology and geophysics.

The Amundsen-Scott Station is divided into six sectors to maintain the integrity of research activities, prevent interference to sensitive instrumentation, and ensure safe operations (See Figure 4-2). The main Station, support operations, and aircraft skiway are located in the Operations sector. Four Science Sectors containing scientific instrumentation and support facilities are the Dark, Quiet, Clean Air, and Downwind Sectors. In addition, the Old Pole Sector which is adjacent to the Dark Sector and off-limits due to safety concerns contains the original South Pole Station.

Figure 4-2. Amundsen-Scott Station Site Plan

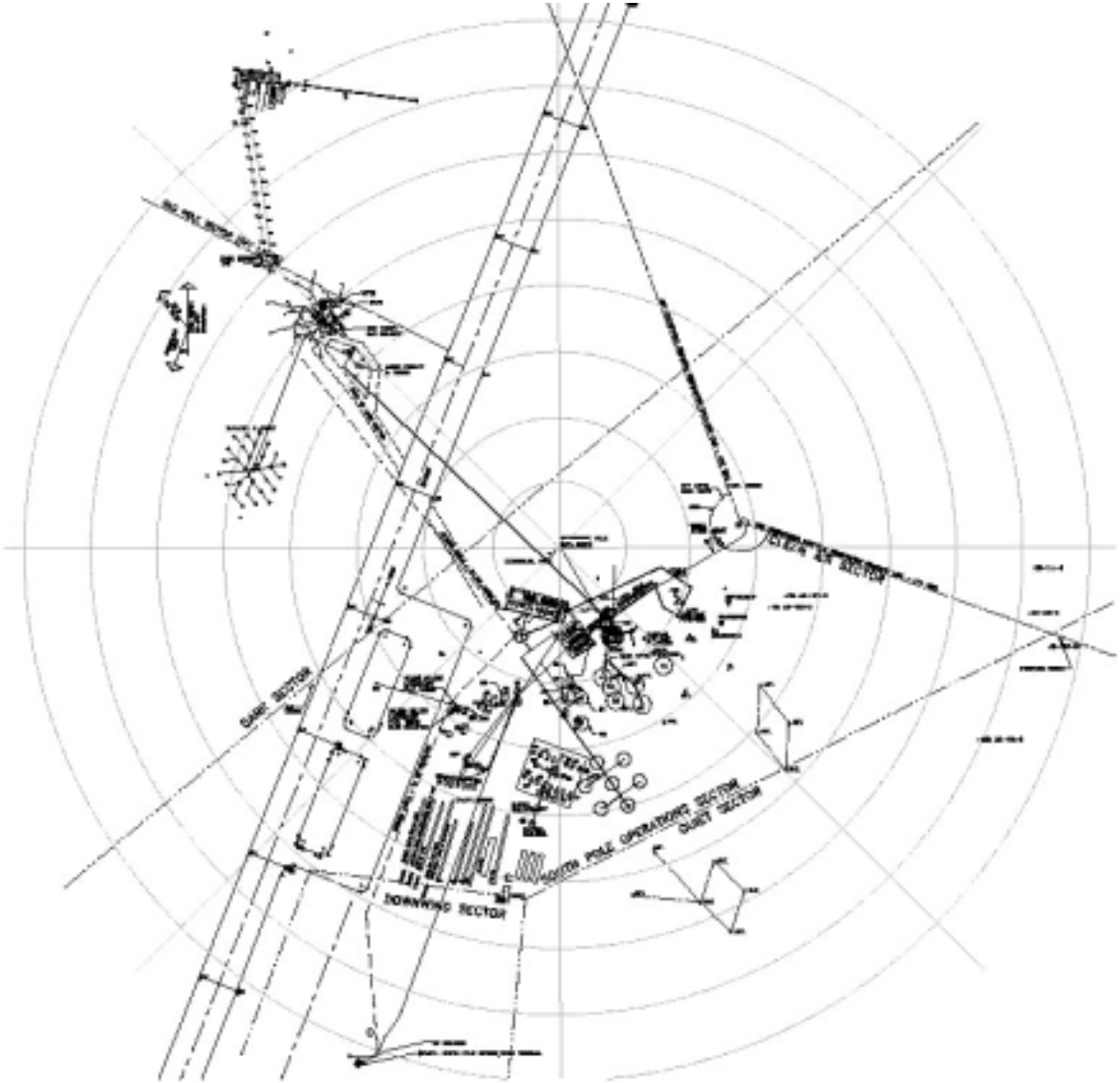

Replacement of key Station facilities is currently being performed as part of the South Pole Station Modernization (SPSM) project. Transition of operations to the new Station facilities and infrastructure is ongoing, and is projected to be completed in 2007. Some functions are being duplicated at both new and old Station facilities during the transitional period until all new systems are thoroughly tested and the old Station can be decommissioned.

It is expected that the Station's infrastructure and operations will be utilized to support various aspects of Project IceCube. The facilities and resources needed to operate the Amundsen-Scott Station excluding Project IceCube are defined as the "baseline conditions" for the Station. Station operations include routine maintenance necessary to sustain Station facilities and support ongoing and planned science projects. For the purposes of this Comprehensive Environmental Evaluation, Project Year 1 will represent the 12-month period from March 2003 - February 2004. The following describes baseline conditions present at the Amundsen-Scott Station prior to the start of Project IceCube.

4.3.1 Facilities

The Amundsen-Scott Station facilities comprise over 60 buildings, towers, antennas, and other structures placed on the snow surface. A 3,000-meter skiway is maintained on the snow surface for use by ski-equipped aircraft. The developed area of the Station, representing previously disturbed areas of the snow surface, is approximately 100 square kilometers in size (Figure 4-2).

Because of the ongoing SPSM project, the Station's facilities may be categorized into five functional areas: the new Station, the old Station, the Summer Camp, the Construction Camp, and remote science. Table 4-1 provides a listing of the facilities in each functional area.

The new Station's facilities include a series of elevated modules, with support utilities (fuel, power, garage, storage) located in a series of unheated arches. A total of 9,516 square meters of heated structures and 3,898 square meters of unheated interior space will be available once the new Station is complete. In 2007, it is expected that the old Station, Summer Camp and Construction Camp facilities will be decommissioned, dismantled and removed from the South Pole.

The Amundsen-Scott Station is occupied year round with considerable more personnel present during the austral summer season when research and construction activities are at their peak levels. Table 4-2 summarizes the staffing plan for the Station for the next eight years and beyond exclusive of Project IceCube, including the number of personnel that will be present for Science and Science Support, Operations and Maintenance, and SPSM construction activities.

Table 4-1. Amundsen-Scott Station Facilities

Functional Area	Building No.	Facilities
New Station	--	Vertical Circulation Tower
	Wing A-1	Winter Berthing (50)
	Wing A-2	Dining/Medical
	Wing A-3	Med/Store/PO
	Wing A-4	Berthing (66)
	Wing B-1	Emergency Power, Berthing (34)
	Wing B-2	Science/Tech
	Wing B-3	Comms/Ops/Admin
	Wing B-4	Multipurpose
	5	Power Plant

Table 4-1. Amundsen-Scott Station Facilities

Functional Area	Building No.	Facilities
	6	New Garage
	50	GCA TACAN
	55	Fuel Pump Shack
	58	Flight Deck Warm Up Shack
	60	Rodriguez Well Building
	80	Comms Hub
	84	Cryogens building
	85	Balloon Inflation Tower
	104	Fuel Trans for Pump House
	108A	Marisat/GOES Terminal
	--	Main Fuel Storage (Fuel Arch)
	--	Emergency Fuel Storage (4 tanks)
	--	NASA Platform
	--	COS-RAY Platform
	--	CRREL Strain Array
	--	Antennas (various)
	--	Seismic Vaults (various)
	--	Automatic Weather Station
Old Station [1]	1	Science/Upper Berthing/Annex
	2	Comms/Library
	3	Galley/Bar
	4	Biomed
	6	Old Garage/Shops/Gym
	9	Skylab
	10	Freshie Storage
	11	Fire House
	12	Weight Room
	13	Gravity Vault
	14	Greenhouse
	15	Black Box
	18	Do Not Freeze Jamesway
	21	Elevated Dormitory
	22	Polar Haven
	28	Power Junction Box/Transformer Vault
	63	Electrical Substation A
	67	Electrical Substation B
	68	Electrical Substation C
	69	Power panel Building
	70	Hazardous Storage Van
	71	Electrical Substation
	76	SOAR Jamesway
	83	Cargo Office
	89	Electrical Substation D
Summer Camp [1]	26	Summer Camp Lounge
	30	Berthing Jamesway J-6
	31	Berthing Jamesway J-7

Table 4-1. Amundsen-Scott Station Facilities

Functional Area	Building No.	Facilities
	32	Berthing Jamesway J-8
	33	Berthing Jamesway J-9
	34	Berthing Jamesway J-5
	35	Berthing Jamesway J-2
	36	Berthing Jamesway J-4
	37	Berthing Jamesway J-3
	38	Head Module - Chades
	47	Bething Hypertat - Wilma
	48	Bething Hypertat - Fred
	51	Bething Hypertat - Betty
	57	Bething Hypertat - Barney
	64	Emergency Generator Building
	81	Summer Camp Weight Room
	86	Berthing Jamesway J-1
	87	Berthing Jamesway J-11
	88	Berthing Jamesway J-10
	90	Head Module
	92	Non-Smoking Lounge
	93	Berthing Jamesway J-12
	94	Berthing Jamesway J-13
	--	Outfall Building
Construction Camp [1]	29	Transformer Building
	41	Jamesway - Carpenter
	42	Jamesway - Office
	43	Jamesway - Elect/Mech
	44	Jamesway - Plumbing
	82	Jamesway - Electrician
	91	Cheese Palace
	96	Carpenter Shop Annex
	--	Old Cargo Arch
Remote Science	23	Atmospheric Research Observatory
	39	321 Module (mobile)
	45	AST/RO
	46	MAPO/VIPER/DASI
	49	Mobile Power Plant #1
	54	Mobile Power Plant #2
	59	UMD Shack (mobile)
	61	Dark Sector Electrical Substation
	66	Palm Shack (mobile)
	72	SPASE-2
	73	Mobile Power Plant #3
	74	Mobile Power Plant #4
	79	Meteor Radar Shack (mobile)
	95	Amanda
	108	RF Building
	--	AASTO Facility and Tower

Note:

[1] Facilities to be decommissioned following completion of SPSM

Table 4-2. Amundsen-Scott Station Staffing Plan

Year (Project Year)	Austral Summer (108 days)		Austral Winter (257 days)	
	Number of People	Number of Person Days	Number of People	Number of Person Days
2004 (1)	235	25,380	68	17,476
2005 (2)	235	25,380	62	15,934
2006 (3)	230	24,840	57	14,649
2007 (4)	220	23,760	55	14,135
2008 (5)	110	11,880	50	12,850
2009 (6)	110	11,880	50	12,850
2010 (7)	110	11,880	50	12,850
2011+ (8+)	110	11,880	50	12,850

4.3.2 Power

Separate old and new power plants generate electricity at the Station during ongoing SPSM activities representing baseline conditions. In addition, four mobile power plants are available to support remote activities. The new power plant is housed in the Power Plant arch and comprises of three 750 kW diesel generators (Caterpillar Model 3512B), of which one is operated at a time. The old power plant is housed in the BioMed arch and is consists of three 410 kW generators (Caterpillar Model 3412). The old power plant will be removed as the old Station is decommissioned. Power lines routed from the Station to the Summer Camp, Construction Camp and remote facilities are typically buried in the snow at a depth of 2 meters.

An emergency power plant (150 kW) is currently located at the Summer Camp. During SPSM, an emergency 320 kW power plant (Caterpillar Model 3406) will be installed in one of the elevated modules, and the Summer Camp power plant facilities will be decommissioned.

Waste heat captured from the Station's power plants is captured in a glycol loop and circulated to the elevated modules, the Rodriguez Well, and various buildings within the arches. Heat exchangers extract the energy from the glycol recovery system.

4.3.3 Water

Freshwater used at the South Pole for potable purposes (e.g., drinking, cooking, sanitary) is primarily obtained from a reservoir created by circulating recovered waste heat in a subsurface cavity known as a Rodriguez Well. One Rodriguez well is currently in operation at the Amundsen-Scott Station and was developed during the 2002-03 season. The reservoir cavity in the ice sheet can exceed 40 meters in height and 30 meters in diameter with a base more than 100 meters in depth (Figure 4-3) yielding approximately 20 million liters of freshwater over its useful life. Freshwater for the Summer Camp and other remote facilities is typically transported by mobile delivery from the Rodriguez Well or may be produced at selected facilities by melting snow. Potable water is treated prior to consumption using filtration and chlorination systems.

Figure 4-3. Typical Rodriguez Well at the Amundsen-Scott Station

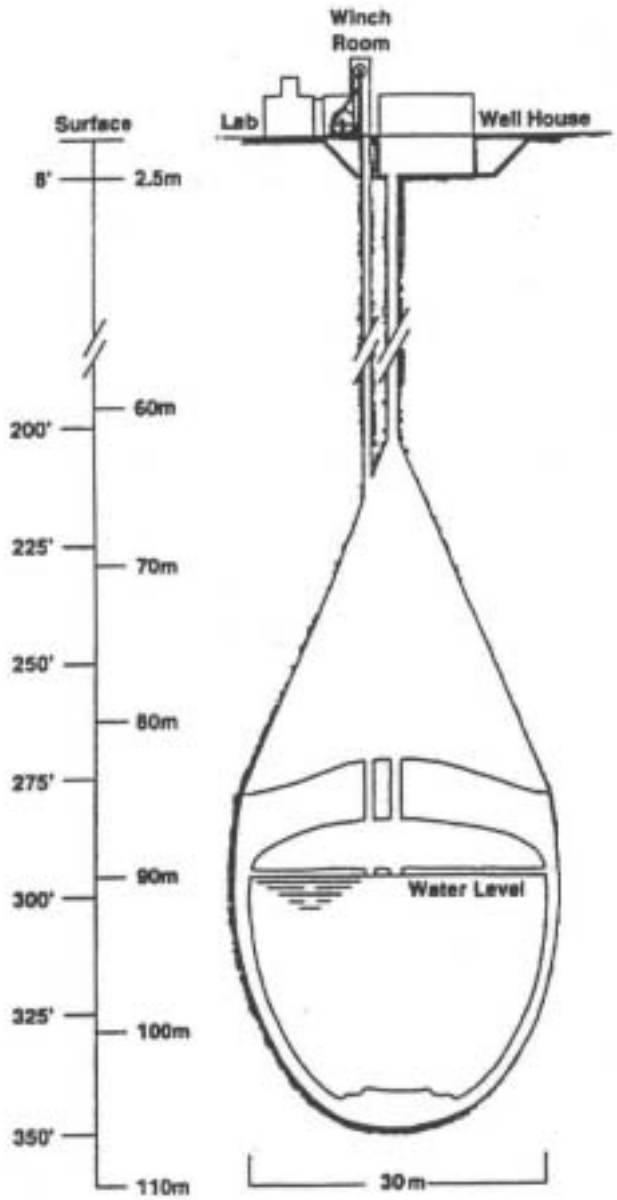

Water consumption is estimated to be 94.5 liters per person per day during the austral summer and 136 liters per person per day during the austral winter. Table 4-3 summarizes the projected water use at the Amundsen-Scott Station for baseline conditions (excluding Project IceCube). Based on these water consumption rates and the projected population, two new Rodriguez Wells will be needed at the Station over the next 8 years and one new well every 7 years thereafter.

Table 4-3. Estimated Water Use at the Amundsen-Scott Station

Year (Project Year)	Population (person-days)			Water Use (liters)
	Austral Summer (108 days)	Austral Winter (257 days)	Total	
2004 (1)	25,380	17,476	42,856	4,775,146
2005 (2)	25,380	15,934	41,314	4,565,434
2006 (3)	24,840	14,649	39,489	4,339,644
2007 (4)	23,760	14,135	37,895	4,167,680
2008 (5)	11,880	12,850	24,730	2,870,260
2009 (6)	11,880	12,850	24,730	2,870,260
2010 (7)	11,880	12,850	24,730	2,870,260
Subtotal	135,000	100,744	235,744	26,458,684
2011+ (8+)	11,880	12,850	24,730	2,870,260

4.3.4 Information Technology

The computer network at the Station consists of a central server, distributed desktop computers, 10Mbs ethernet and 100 Mbs FDDI local area network (LAN). This LAN provides centralized electronic, mail, user applications, and data archiving and distribution services which are connected to the USAP network and Internet via the TRSS, MARTISAT-2 and GOES-3 satellite services. The distribution system consists of fiber optic, twisted cable, and thicknet/thinnet ethernet cable systems. The Station's LAN is used to support the science projects conducted at the South Pole, and may be used to support the dedicated data collection and processing facilities that will be installed for Project IceCube.

4.3.5 Communications and Data Transfer

The South Pole is beyond the view of conventional geostationary communications satellites and therefore is denied access to communications taken for granted in mid-latitudes. The Station has access to a TRSS satellite (TDRS F1), an old inclined NASA tracking and data relay satellite system with high speed digital service. The TRSS satellite will utilize a new earth Station that will be constructed at the South Pole during SPSM to manage communications and data transfer activities at the Station, including scientific research efforts that must transfer very large sets of data such as Project IceCube. However, the design life of the TDRS F1 satellite has been exceeded and the unit is presently in a high risk of failure. Should the TDRS F1 fail, follow-on communications options have been identified:

Use remaining existing satellites (MARISAT-2, GOES-3) which provide medium speed digital service
Implement wideband Iridium feeder-link service (1.55 Mb/s data rate)
Acquire follow-on TDRSS service, with the next opportunity being TDRS F3 in early 2006.

If new facilities are needed at the Amundsen-Scott Station in the future, they will be addressed in a separate environmental assessment document.

4.3.6 Berthing

Multiple berthing facilities are available under baseline conditions at the Station to support the construction (SPSM), operations and management, and science personnel. Current berthing facilities include the new Station, old Station, and Summer Camp. Once completed, the new Station is designed to support a maximum population of 150 in the austral summer and 50 in the austral winter.

Berthing facilities available during SPSM activities include the new Station, 28 spaces at the old Station (upper berthing), and up to 192 spaces at the Summer Camp (i.e., Jamesways, Hypertats, Elevated Dormitory). Toilet facilities at the Summer Camp consist of separate Head Modules. Currently, a total of 50 berthing rooms are available at the new Station in Wing A-1; an additional 100 rooms will constructed in phases during the next several years, including 34 rooms in Wing B-2 and 66 rooms in Wing A-4. As the new berthing facilities are constructed in the new elevated Station to support the baseline population, personnel will be housed in those facilities and the existing facilities removed from service.

4.3.7 Food Services

Food services for all personnel housed at the Station under baseline conditions are provided by a central Galley located in the new elevated Station which is equipped with food preparation, storage, and dining facilities. The Galley was designed to support a summer population of 150 people but has been used to accommodate a larger population of up to 235 people during SPSM. The former galley facilities in the old Station are present but are not operational and will be decommissioned during SPSM.

4.3.8 Transportation Logistics

All supplies, including cargo, fuel, and personnel, currently conveyed to the South Pole are exclusively transported through the use of ski-equipped LC-130 aircraft. A 3,000 meter skiway aligned with the prevailing winds is maintained for use during the austral summer season and includes several mobile structures used to support runway operations and cargo operations. The LC-130 aircraft has 105 cubic meters of cargo space (12.3 meters in length, 3.1 meters in width, and 2.7 meters in height), and is capable of delivering up to 11,800 kilograms of cargo per flight. Dedicated fuel flights to the Amundsen-Scott Station can transport and deliver up to 14,400 liters of fuel per flight from the LC-130's wing tanks.

The maximum number of flights per year that can used to provide logistical support to the South Pole based on available aircraft, flight crews, and operating considerations is estimated to be 367. During the past several operating seasons, the actual number of flights to the South Pole (i.e., 262 flights in 2001-02, 293 flights in 2002-03) was far less than the maximum due to delays, adverse weather, or other unexpected conditions. Table 4-4 summarizes the quantity of cargo and fuel needed to support Station operations, science and SPSM construction under baseline conditions and the number of LC-130 flights required to transport those loads. Under these load conditions, the typical number of flights achieved over the past two years would be sufficient to transport the needed cargo to the South Pole.

Table 4-4. Estimated Logistical Support Requirements for the Amundsen-Scott Station

Year (Project Year)	Materials/Supplies Required (kg)	Waste Removed (kg)	Number of LC-130 Flights Required [1]
2004 (1)	3,540,000	340,200	300
2005 (2)	2,950,000	374,220	250
2006 (3)	2,843,800	907,200	241
2007 (4)	2,773,000	419,580	235

Table 4-4. Estimated Logistical Support Requirements for the Amundsen-Scott Station

Year (Project Year)	Materials/Supplies Required (kg)	Waste Removed (kg)	Number of LC-130 Flights Required [1]
2008 (5)	2,690,400	453,600	228
2009 (6)	2,584,200	408,240	219
2010 (7)	2,678,600	317,520	227
Subtotal	20,060,000	3,220,560	1,700
2011+ (8+)	2,194,800	317,520	186

The USAP is currently conducting a multi-year proof of concept evaluation to determine the feasibility of using an overland traverse capability to transport supplies (e.g., cargo, fuel) from McMurdo Station to the South Pole. Assuming the proof of concept evaluation is successful, a traverse capability may be available to transport supplies to the South Pole beginning in 2006. If the overland traverse is successfully developed, it is assumed that some cargo which is subsequently used to support Project IceCube may be transported to the South Pole via this mechanism in the future.

4.3.9 Operations Logistics – Equipment and Services

Logistics support at the Amundsen-Scott Station includes diesel-powered heavy equipment (e.g., bulldozers, loaders, cranes, trenchers), vehicles (e.g., tracked vehicles, vans) portable generators, and gasoline-powered snowmobiles and other ancillary equipment (e.g., chainsaws, drills). Under baseline conditions, this equipment is used to transport cargo and personnel, groom the aircraft skiway, remove snow, and perform various activities such as construction and maintenance support and mobile delivery of fuel to remote buildings at the Station.

Table 4-5 identifies 41 pieces of diesel-powered equipment and vehicles and 14 snowmobiles that are currently maintained in the Amundsen-Scott Station vehicle pool and which may be available to support science activities such as Project IceCube. Diesel equipment is typically refueled at the Fueling Module (i.e., refueling station) in the Station's Garage Arch. When not in use, vehicles are typically parked on the snow surface and vehicle maintenance is conducted in the Garage Arch.

Other services are available at the Station that may be utilized for logistical support purposes. These include welding, material fabrication, or installation or maintenance of electrical, plumbing, or mechanical components.

Table 4-5. Amundsen-Scott Station Equipment and Vehicles

Type	Manufacturer	Model	Description
ATV	Logan Mfg Co	1200-C	1981, "Jackie", Track Passenger
ATV (2)	Logan Mfg Co	1200-C	1986, Track Passenger, Spryte
ATV (2)	Logan Mfg Co	1800	1991, Track Stake, Stake Bed
Bulldozer	Caterpillar Inc	D4d	1971, "Marcia", Bulldozer, W/Backhoe
Bulldozer	Caterpillar Inc	D6d LGP	1976, "Southern Belle", Bulldozer
Bulldozer	Caterpillar Inc	D6d LGP	1978, "Dominator", Bulldozer
Bulldozer	Caterpillar Inc	D7h LGP	1987, "Pearl", Bulldozer, W/Winch
Crane	Spandeck	Mantis6610	1996, "Mantis", Crane, 33 Ton
Crane	Spandeck	Mantis 301	1987, "Mantis", Crane, 15 Ton
Crane	Spandeck	Mantis6610	1997, "Mantis", Crane, 33 Ton
Generator	Caterpillar Inc	D342c	1978, Generator, 140,000 W Diesel

Table 4-5. Amundsen-Scott Station Equipment and Vehicles

Type	Manufacturer	Model	Description
Generator (3)	Caterpillar Kato	3412	1988, Generator, 475,000 W Diesel
Generator	Caterpillar Inc	D330t	1972, 100,00o W Diesel
Generator	Caterpillar Inc	D342	1963, "Penny May", Generator
Generator (2)	Caterpillar	3306ta	Generator, 150,000 W Diesel
Generator	Caterpillar	3304	Generator, 60,000 W Diesel
Generator	Caterpillar	3306bd1	Generator, 205,000 W Diesel
Generator (3)	Cat/National Electric	3512b	1998, Generator, 750,000 W Diesel
Generator (2)	Caterpillar Inc	3406	2000, Generator, 320 Kw, Emergency
Loader	Caterpillar Inc	963	1991, Loader, Track Loader W/Rip
Loader	Caterpillar Inc	953b LGP	1994, Track Loader, Mod 953b, Ar
Loader	Caterpillar Inc	953b LGP	1994, Track Loader, Mod 953b, Se
Loader	Caterpillar Inc	953 LGP	1988, "Denise", Loader, Track
Loader	Caterpillar Inc	953 LGP	1990, "Cassie Rose", Loader
Loader	Caterpillar Inc	953 LGP	1987, "Ozone", Loader, Track
Loader	Caterpillar Inc	953c	1996, Track Loader, Model 953c
Snowblower	Peter Snow Miller	Unk	Snow Blower
Tractor	Caterpillar Inc	Challenger	1997, Tractor, Model Ch 55,
Trencher	Ditch Witch	8020jd	1992, Ditch Witch Trencher
Trencher	Clark Equipment	231	1990, Excavator Tunneler, Engine
Truck, Fla	Ford Motor Co	F350	1994, Truck, Haz Mat Response, F
Van (2)	Ford Motor Co	E-350	1999, Van, 1 Ton, 5.4l, V-8, O/H Cam
Snowmobile (3)	Bombardier	Skandic	Rotax Twin Engine
Snowmobile	Yamaha	Vk540ii	
Snowmobile (2)	Bombardier Corp	Alpine Ii	
Snowmobile (2)	Bombardier	Elan 250	
Snowmobile	Bombardier Corp	Rotex 500	
Snowmobile (4)	Bombardier	Skandic-1539	
Snowmobile	Bombardier Corp	Skandic WT	

4.3.10 Fuel Management

The main fuel supply at the Station is AN-8, a diesel turbine fuel with ice inhibitors to suppress the freezing point to -72^0 C. The Station has a nominal capacity to store approximately 1.8 million liters of diesel fuel. Fuel is offloaded from the wing tanks of the LC 130 aircraft via a flexible hose to a steel tank near the skiway or directly to the main Station storage system. Bulk fuel at the Station is stored in a series of 45 steel tanks housed in the Station's Fuel Arch, each having a capacity of 37,800 liters and equipped with secondary containment. Emergency caches of fuel include four sled-mounted 37,800 double-walled stainless steel tanks placed at strategic locations around the Station.

The fuel distribution system conveys diesel from the storage tanks to dispensing points around the Station via a steel pipe recirculation loop system. The fuel is constantly circulated to prevent the fuel from freezing at the extremely low temperatures. The major dispensing locations include the power plant and the vehicle refueling area. Mobile delivery units are used to supply fuel to buildings located at the Summer Camp and the remote science facilities. A small volume of unleaded gasoline is used in vehicles and small engines at the Station and is stored in 208-liter drums. An inventory of the quantity of fuel stored at the Station is maintained and reported as well as the amount of fuel transferred between bulk storage containers and to various buildings and equipment.

Table 4-6 summarizes the projected fuel use for the Station up through year 2011 and beyond for power generation and water production, heating, and operation of heavy equipment and vehicles excluding Project IceCube. Following completion of SPSM activities in 2007, fuel to support baseline conditions at the Station will be approximately 1.7 million liters per year.

During the handling or storage of fuel at the South Pole, spills or leaks may occur. Because fuel spills and leaks are unplanned, their frequency, duration, and magnitude are expected to vary year to year. Spill reporting procedures require documentation of all spills regardless of size, as described in the *USAP Master Permit* (reference 3). Each year, reported spills are summarized by RPSC in *Annual reports for the USAP Master Permit* (reference 5). The USAP has developed a *Spill Prevention, Control, and Countermeasures (SPCC) Plan* (reference 6) to ensure that the risk of accidental spills and leaks is minimized at USAP facilities.

Spill response procedures in the USAP are contained in Oil Spill Contingency Plans or Oil Spill Response Plans or Guidebooks specific to stations or field camps maintained by USAP. Currently, spill response procedures for the South Pole Station are described in the *Amundsen-Scott South Pole Station Oil Spill Response Plan* attached as Appendix A to the *Field Camp Oil Spill Response Guidebook* (reference 7). The contingency plan for the Amundsen-Scott Station is in the process of being updated and the new plan will be distributed and the procedures will be implemented accordingly beginning in the 2003-04 austral summer.

Table 4-6. Estimated Fuel Consumption at the Amundsen-Scott Station

Year (Project Year)	Diesel (liters)				Gasoline (liters)	Total
	Power Generation and Water Production	Heating (space, water)	Equipment and Vehicle Operation	Subtotal	Equipment and Vehicle Operation	
2004 (1)	1,194,480	181,440	136,080	1,512,000	15,000	1,527,000
2005 (2)	1,343,790	204,120	153,090	1,701,000	15,000	1,716,000
2006 (3)	1,343,790	204,120	153,090	1,701,000	15,000	1,716,000
2007 (4)	1,343,790	204,120	153,090	1,701,000	15,000	1,716,000
2008 (5)	1,343,790	204,120	153,090	1,701,000	15,000	1,716,000
2009 (6)	1,343,790	204,120	153,090	1,701,000	15,000	1,716,000
2010 (7)	1,343,790	204,120	153,090	1,701,000	15,000	1,716,000
Subtotal	9,257,220	1,406,160	1,054,620	11,718,000	105,000	11,823,000
2011+ (8+)	1,343,790	204,120	153,090	1,701,000	15,000	1,716,000

4.3.11 Materials Management

All operational and research materials at the South Pole are carefully managed to ensure that they are properly stored, accounted for, and available for use. All materials destined for the South Pole are first delivered to McMurdo Station and subsequently delivered to the South Pole via LC-130 aircraft. Because the majority of the materials for the Amundsen-Scott Station are delivered to McMurdo Station on the annual resupply vessel each February, final delivery to the South Pole may occur during the end of the Station's operating season or the following austral summer.

Dedicated staff are responsible for ordering, handling and tracking materials at the Station. Materials received at the South Pole are stored in several buildings or staged within the arches or on raised cargo berms on the snow surface located next to the Summer Camp. During the Station reconstruction, an area within the arches will be established specifically for material storage and will be designated as the cargo arch.

All materials used at the South Pole are tracked in a comprehensive inventory database known as MAPCON. The MAPCON database contains a wide variety of information on materials including a product description, stock and part numbers, stockroom location (building or cargo area), quantity available, and quantity ordered. Materials designated for specific work centers or projects, including research efforts such as Project IceCube, are identified accordingly in the MAPCON database.

Many materials used at the South Pole contain *Designated Pollutants*, or substances defined by the NSF Waste Regulation 45 CFR §671, which must be identified in the *USAP Master Permit* and handled in a manner to prevent their release to the environment. Items containing Designated Pollutants are typically considered hazardous materials and may include fuel and commonly-used products such as adhesives, batteries, chemicals, cleaners, compressed gasses, disinfectants, fire extinguishing agents, glycol, refrigerants, solvents, paints, oils, and lubricants. The MAPCON database is used to maintain an inventory of over 1,800 different products used at the Station that contain Designated Pollutant components.

4.3.12 Waste Management

All wastes generated at the Amundsen-Scott Station, with the exception of sewage and domestic liquid wastes which are discharged locally to deep ice pits, are packaged and transported to McMurdo Station each austral summer for processing and subsequent retrograde. Wastes consist of nonhazardous solid wastes (i.e., recyclables, disposables, incinerables) and Antarctic Hazardous wastes, or wastes that contain one or more designated pollutants, as defined by the Waste Regulation (45 CFR §671). Current waste management practices at the Station are designed to ensure that all of the wastes are stored in a manner which prevents their release to the Antarctic environment. Wastes stored at the Station must be removed from within the time constraints established in the Waste Regulation, including a 3-year period for nonhazardous solid wastes and 15 month period for Antarctic hazardous wastes.

Wastes generated at the Amundsen-Scott Station are segregated at the source and collected in containers maintained at work centers and centralized accumulation areas. Antarctic Hazardous Waste collection areas are subject to additional requirements, including labeling and weekly inspection. Waste processing at the South Pole Station only consists of the volume reduction for selected waste streams (e.g., aluminum, cardboard) designed to facilitate efficient transport to McMurdo Station. Waste processing is currently performed in a structure known as the Polar Haven and packaged wastes awaiting transport are stored in an outside area (i.e., Recycling Berm). During the Station reconstruction, a new waste processing and storage area will be established inside the cargo arch.

The total quantity of waste expected to be generated at the South Pole Station each year is presented in Table 4-4 and includes a significant amount of construction and demolition debris derived from the ongoing SPSM project but excludes wastes expected by generated by Project IceCube and related support personnel. The waste generated each year at the South Pole Station is transported to McMurdo Station using the return legs of logistical supply flights.

Wastewater generated at the Amundsen-Scott Station originates from various domestic and equipment-related sources at the main Station and personnel support facilities (e.g., Summer Camp, elevated Dorm). Wastewater consists of sanitary wastes containing blackwater (i.e., urine and human solid waste),

greywater from potable water used for washing and bathing containing trace residues of food, soap, cleaning materials, and meltwater from a sump located in the Station's Garage. Wastewater generation is expected to be equivalent to the quantity of potable water used at the Station and is estimated to be 94.5 liters per person per day during the austral summer and 136 liters per person per day during the austral winter. Based on a maximum Station population of 235 people, up to 4.7 million liters of water may be consumed during each year of SPSM activities and approximately 2.8 million liters per year thereafter. The projected quantity of wastewater expected to be discharged from the Station is summarized in Table 4-3.

The wastewater disposal system at the Station consists of heated collection piping routed to a series of sewage "bulbs". The bulbs at the new Station utilize the cavities resulting from decommissioned Rodriquez Wells, and may accommodate up to 20 million liters of wastewater. Additional sewage bulbs in use at the old Station and Summer Camp were created by drilling a hole in the snow and using the intrinsic heat in the wastewater to melt the surrounding snow, although the capacity of the bulbs developed in this manner is less, approximately 7.6 million liters. When full, the wastewater becomes frozen in the ice sheet. During the 2002-03 operating season, four sewage bulbs were utilized: one at the new Station (N1), one at the old Station (D8), one at the Summer Camp (S8), and one at the elevated dorm (S6).

Once a sewage bulb is filled, a new bulb is developed and the wastewater piping is rerouted. A portion of the piping may be abandoned in-place if it is frozen in the ice and inaccessible. The locations of used sewage bulbs are recorded, and the locations of future Rodriguez Wells and associated sewage bulbs are planned so that utilization of piping can be maximized while minimizing the extent of the disposal area (Figure 4-4).

The estimated pollutant loadings from all wastewater discharges at the Amundsen-Scott Station are calculated based on daily per capita loading factors (kg/person/day) developed for the *USAP Master Permit* and the Station population, expressed as person-days. Loading factors for total suspended solids (TSS), biochemical oxygen demand (BOD), and total ammonia (NH3) have been developed and are assumed to be representative of untreated wastewater. The projected pollutant loadings for the wastewater discharges from the Station are included in Table 4-7.

The USAP has implemented strict guidelines to ensure that (non-domestic) pollutants are not introduced to the wastewater that is discharged into the Antarctic environment. Since 1994, sewage at the Amundsen-Scott Station has been periodically tested as part of a monitoring program for the *USAP Master Permit* and the concentration of various pollutants present in the wastewater have been identified (Appendix A). The results are indicative of a strong, relatively undiluted municipal wastewater stream.

Figure 4-4. Rodriguez Well and Sewage Bulb Use Plan for the Amundsen-Scott Station

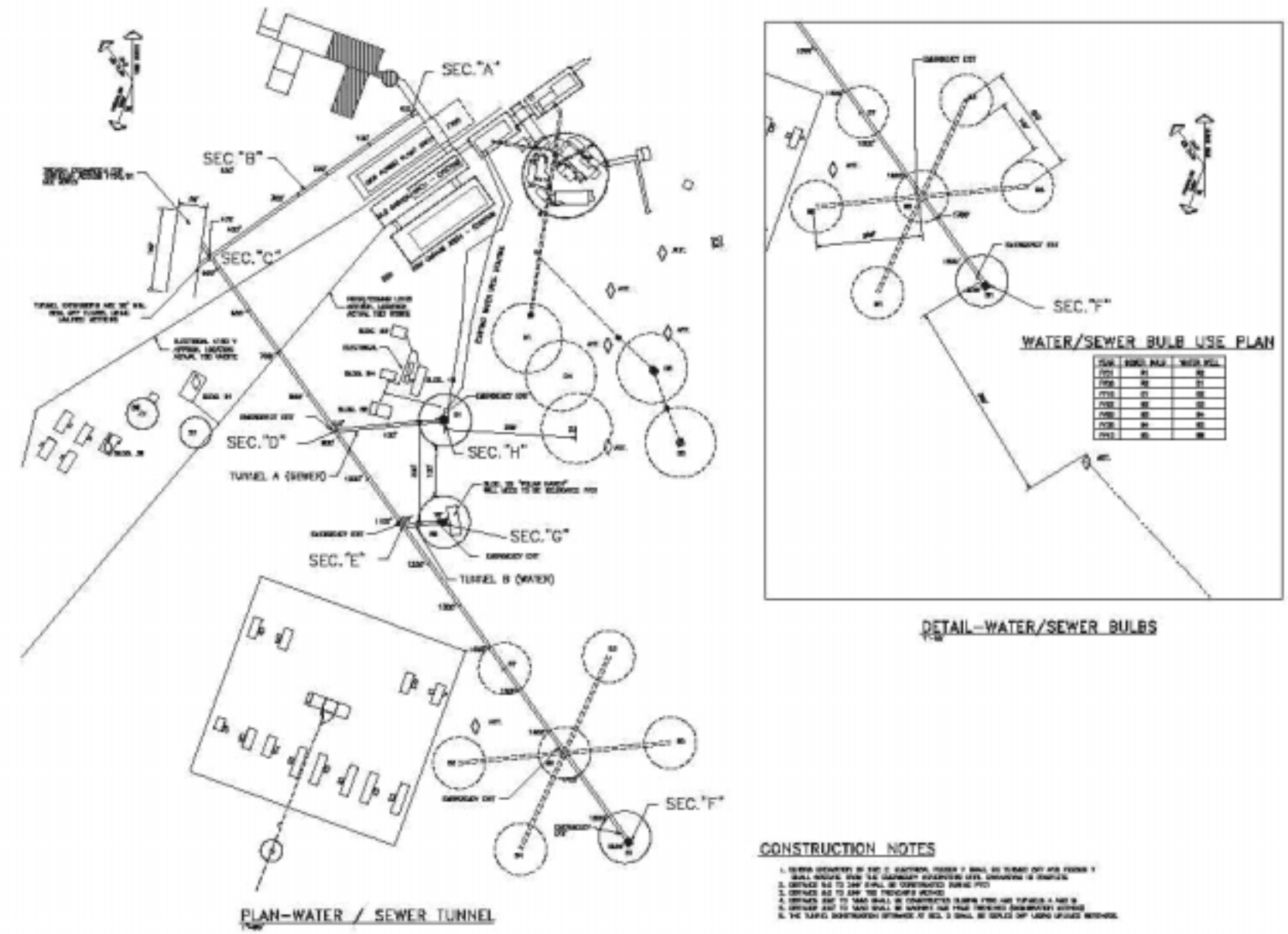

Table 4-7. Estimated Wastewater Discharge and Pollutant Loadings at the Amundsen-Scott Station

Year (Project Year)	Population (person-days)	Wastewater Discharge (liters)	Pollutant Loadings (kg)		
			Total Suspended Solids	Biological Oxygen Demand	Ammonia Nitrogen
2004 (1)	42,856	4,775,146	2,014	4,286	257
2005 (2)	41,314	4,565,434	1,942	4,131	248
2006 (3)	39,489	4,339,644	1,856	3,949	237
2007 (4)	37,895	4,167,680	1,781	3,790	227
2008 (5)	24,730	2,870,260	1,162	2,473	148
2009 (6)	24,730	2,870,260	1,162	2,473	148
2010 (7)	24,730	2,870,260	1,162	2,473	148
Subtotal	235,744	26,458,684	11,080	23,574	1,414
2011+ (8+)	24,730	2,870,260	1,162	2,473	148

4.3.13 Emergency Services

Emergency services at the Amundsen-Scott Station include facilities and staff resources available to provide medical, fire, and spill response support. The Station has a medical facility and full-time physician to serve the Station population. In addition, the Station has a designated trauma team trained to handle emergencies at the Station. The Station has designated fire brigade teams trained to respond to fire emergencies at the Station. The Station is equipped with firefighting equipment as well as automated fire alarm and extinguishing systems.

The Station also has designated spill response teams trained to respond to spill events that occur at the Station. Stocks of spill response materials (e.g., absorbents) are maintained at strategic locations around the Station. Heavy equipment and additional staff may be assigned to assist in spill response as needed. Should a spill involve a tank failure or large discharge of fuel that is beyond the capacity of the Station's response resources, the Station Manager can request assistance from McMurdo Station during the summer season.

4.4 Description of the Scientific Research Projects at the South Pole

A variety of scientific research projects are conducted at the South Pole, primarily in the fields of aeronomy and astrophysics, climate systems, and geology and geophysics. Table 4-8 presents a listing of the scientific research projects that were conducted at the South Pole during the 2002-2003 season, and includes numerous long-term projects that are expected to continue into the future. Additional science projects currently planned for the South Pole include the Background Imaging of Cosmic Extragalactic Polarization (BICEP) experiment designed to measure the polarization of the cosmic microwave background (CMB), and installation of the South Pole Telescope (SPT), an 8-Meter radio telescope.

The majority of research that is conducted at the South Pole involves Aeronomy and Astrophysics, and the South Pole presents unique opportunities for scientists in these fields. Thanks to a minimum of environmental pollution and anthropogenic noise, the unique pattern of light and darkness, and the properties of the geomagnetic force field, scientists staging their instruments here can probe the structure of the Sun and the Universe with unprecedented precision. Studies supported by the Aeronomy and Astrophysics program explore three regions:

- The stratosphere and the mesosphere: In these lower regions, current research focuses on stratospheric chemistry and aerosols, particularly those implicated in the ozone cycle.
- The thermosphere, the ionosphere, and the magnetosphere: These higher regions derive many characteristics from the interplay between energetically charged particles (ionized plasmas in particular)and geomagnetic/geoelectric fields. The upper atmosphere, particularly the ionosphere, is the ultimate sink of solar wind energy transported into the magnetosphere just above it. This region is energetically dynamic, with resonant wave-particle interactions and joule heating from currents driven by electric fields.
- The galaxy and the Universe beyond, for astronomical and astrophysical studies: Many scientific questions extend beyond the magnetosphere, including a particular interest in the Sun and cosmic rays. Astrophysical studies are conducted primarily at Amundsen-Scott South Pole Station or on long-duration balloon flights launched from McMurdo Station. The capability of such balloons is expanding dramatically.

In addition to projects in aeronomy and astrophysics, climate studies performed at the South Pole provide valuable data on atmospheric circulation systems and dynamics, including the energy budget; atmospheric chemistry; transport of atmospheric contaminants to the Antarctic; and the role of large and mesoscale systems in the global exchange of heat, momentum, and trace constituents.

A number of remote science facilities and associated instrumentation for these projects are located at various distances from the main Amundsen-Scott Station. In conjunction with the remote science facilities, the remote science area of the Amundsen-Scott Station is divided into four sectors to maintain the integrity of research activities and to prevent interference to sensitive instrumentation. Restrictions are placed on activities performed within each sector appropriate to protect the type of research being conducted. The four sectors are the Dark, Quiet, Clean Air, and Downwind (See Figure 4-2). Table 4-9 presents a listing of the science sectors, a summary of the associated restrictions, and a listing of the existing structures within each sector.

Table 4-8. Research Projects Conducted at the South Pole During the 2002-2003 Season

Research Area	Event #	Project Title
Aeronomy and Astrophysics	AA-130-O	Antarctic Muon and Neutrino Detector Array (AMANDA)
	AO-101-S	Magnetometer Data Acquisition at McMurdo and Amundsen-Scott South Pole Stations
	AO-102-S	High-latitude Magnetic Pulsations
	AO-104-O	Antarctic Auroral Imaging
	AO-106-S	Extremely-Low-Frequency (ELF)/Very-Low-Frequency (VLF) Waves at the South Pole
	AO-107-O	Study of Polar Stratospheric Clouds by LIDAR.
	AO-108-O	A Very-Low-Frequency (VLF) Beacon Transmitter at the South Pole
	AO-109-O	South Pole Air Shower Experiment (SPASE-2)
	AO-110-S	High-latitude Antarctic Neutral Mesospheric and Thermospheric Dynamics and Thermodynamics.
	AO-111-S	Riometry in Antarctica and Conjugate Regions.
	AO-115-O	Mapping the Sound Speed Structure of the Sun's Atmosphere (SPRESO)
	AO-117	Auroral dynamics by the all-sky-imager at Amundsen-Scott South Pole Station
	AO-120-O	Solar and Heliosphere Studies with Antarctic Cosmic Ray Observations
	AO-128-O	A Versatile Electromagnetic Waveform Receiver for South Pole Station
	AO-129-O	Effects of Enhanced Solar Disturbances during the 2000-2002 Solar-max Period, on the Antarctic Mesosphere-Lower-Thermosphere (MLT) and F

Table 4-8. Research Projects Conducted at the South Pole During the 2002-2003 Season

Research Area	Event #	Project Title
		Regions Composition, Thermodynamics, and Dynamics
	AO-136-O	The Measurement and Analysis of Extremely-Low-Frequency (ELF) Waves at South Pole Station
	AO-284-O	Dynamics of the Mesosphere and Lower Thermosphere Using Ground-based Radar and TIMED Instruments
	AO-371-O	Antarctic Submillimeter Telescope and Remote Observatory (AST/RO)
	AO-373-O	Degree Angular Scale Inferometer (DASI): Cosmic Microwave Background Anistropy Polarization and Fine-scale Structure
	AO-376-O	Mapping Galactic Magnetic Fields with the Submillimeter Polarimeter for Antarctic Remote Observations (SPARO)
	AO-377-O	Wide-Field Imaging Spectroscopy in the Submillimeter: Deploying the South Pole Imaging Fabry-Perot Interferometer (SPIFI)
	AO-378-O	ACBAR: Arcminute Cosmology Bolometer Array Receiver
	T-513-S	UV Monitoring Network Program
Biology And Medicine	BO-321-S	Prevention of Environment-Induced Decrements in Mood and Cognitive Performance.
Geology and Geophysics	GO-090-S	Logistics Support for Global Seismographic Network Stations at the Amundsen-Scott South Pole and Palmer Stations
Ocean and Climate Systems	OO-257-O	South Pole Monitoring for Climate Change: Amundsen-Scott South Pole Station
Trans-Antarctic Expedition	IU-323-O	Deposition of the HFC Degradation Product Trifluoroacetate in Antarctic Snow and Ice

Table 4-9. Amundsen-Scott Station Remote Science Sectors

Sector	Restrictions	Existing Structures
Quiet	Vehicle Restrictions Minimize All Surface Disturbances Minimize Radio Frequency Interference	Antennas
Downwind	Height Restrictions	RF Building Marisat/GOES Terminal
Clean Air	Vehicle Restrictions Restrict All Surface Activities No Pollutant Discharge	Atmospheric Research Observatory Met Tower
Dark	Minimize Electromagnetic Radiation Sources Height Restrictions Restrict Radio Frequency Transmission	AST/RO MAPO/VIPER/DASI Electrical Substation AMANDA Array SPASE-2 building and array AASTO Facility and Tower

5.0 DESCRIPTION OF ENVIRONMENTAL IMPACTS

5.1 Introduction

This chapter identifies projected impacts that may occur associated with the proposed action to build and operate the Project IceCube neutrino telescope. Section 5.2 discusses the methods and sources of data used to identify, quantify, and evaluate the potential impacts. Projected environmental impacts are presented in Section 5.3. The potential impacts of Project IceCube will be evaluated relative to the initial environmental state (i.e., baseline conditions) at the Amundsen-Scott South Pole Station. Section 5.4 presents a summary of the potential impacts of Project IceCube in tabular form.

5.2 Methodology and Data Sources

The potential environmental impacts associated with the proposed Project IceCube activities were identified by reviewing design and planning documents, workshop presentations, and briefings for the Project. These documents contain data pertaining to proposed scientific instrumentation, drilling, and array deployment activities and schedule, logistical support requirements, and dedicated project staffing, equipment, and other operational support needs.

The initial environmental state (i.e., baseline conditions) at the South Pole was developed to define conditions at the Station in the absence of the proposed action (i.e., Project IceCube). Potential environmental impacts resulting from baseline operations at the Amundsen-Scott Station have already been reviewed in the *U.S. Antarctic Program Final Supplemental Environmental Impact Statement* (reference 8) and were further evaluated using current planning data and environmental release data developed for the *USAP Master Permit*. No significant long-term impacts to human health or the environment resulting from baseline operations were found in regards to land use, air quality, waste management, wastewater discharge, fuel spills, or ecological resources.

Sources of information and techniques for evaluating environmental impacts used in this CEE also include previous environmental documents such as the Final Environmental Impact Statement for *Modernization of the Amundsen-Scott South Pole Station, Antarctica* (reference 9), the Initial Environmental Evaluation for the *Antarctic Muon and Neutrino Detector Array(AMANDA) Project at the South Pole* and related Amendments(references 10, 11, 12), and the Environmental Document for *Development of* and *Planning, Construction, Operation, and Decommissioning of New, Expanded, or Relocated Field Camps in Antarctica* (reference 13).

Using the data characterizing the proposed action and baseline conditions, potential environmental impacts were derived using a number of quantitative and qualitative methods appropriate and relevant to specific actions or the affected environment. The potential impacts include:

- Physical Disturbance to the Snow/Ice Environment
- Air quality
- Releases to the Snow/Ice Environment
- Impacts to Amundsen-Scott Station Operations
- Impacts to Science at the South Pole
- Second Order and Cumulative Impacts

The detailed methods used to derive the potential environmental impacts are described in the following sections.

5.2.1 Physical Disturbance to Snow/Ice Environment

Physical disturbances resulting from Project IceCube was estimated based on proposed drilling and array deployment specifications, site maps, and Project site operations contained in Project plans (reference 2). The area of existing physical disturbance at the South Pole was estimated based on the occupied areas of the Amundsen-Scott Station, including areas of the polar plateau used for scientific research and logistical support purposes.

5.2.2 Air Emissions

Air emissions were estimated using testing data and models, which included a series of emission factors. The air emissions calculations including a listing of air emissions factors are presented in Appendices C, D, and E.

Emissions estimates derived for power generation, space heating, and equipment operation activities were calculated based on emissions factors compiled by U.S. EPA (reference 14) and projected fuel consumption rates (Appendix B). Emissions estimates for the Whitco Model 75 (enhanced) water heaters were derived from exhaust gas testing data. Emissions for power generation equipment currently in service at the Amundsen-Scott Station were also derived from emissions testing data.

Estimated fuel evaporative emissions were quantified based on models developed by the U.S. EPA and the quantity of fuel handled and associated number of transfers (Appendix C). It should be noted that the fuel volatilization emissions estimates presented in this CEE were based on an ambient temperature of 2 ^{0}C and represent a conservative estimate compared to the extremely cold temperatures that would be expected at the South Pole.

Emissions from logistical support aircraft were derived from emissions factors compiled by the U.S. EPA and operating parameters of the aircraft such as the flight hours and the number of takeoff/landing cycles (Appendix D).

5.2.3 Releases to the Snow/Ice Environment

Releases to the snow and ice environment were quantified based on proposed Project activities and models developed for specific releases such as wastewater. The array components and associated cables that would be deployed in the ice sheet were quantified based on the proposed Project plans (reference 2). Wastewater would be generated by Project and Station personnel and the volume released was assumed to be equivalent to quantity of water used based on average per capita water consumption rates for the austral summer and winter periods (Table 3-6, Table 4-3). Pollutant loadings resulting from wastewater discharges were calculated based on per capita loading factors (Appendix A) and the projected populations. Minor releases of irretrievable operational materials (e.g., wood, cable) expected during drilling and array deployment activities would occur randomly and cannot be quantified.

5.2.4 Impacts to Amundsen-Scott Station Operations

Projected impacts to Amundsen-Scott Station operations were based on a qualitative review of the proposed Project activities and Station operations. Several parameters related to proposed Project activities were considered in this qualitative evaluation, including the amount of fuel that would be transferred or the amount of waste that would be managed using the Station's resources. In some instances, the Project IceCube design plans accounted for the allocation of dedicated Project personnel to perform selected support functions at the Station.

5.2.5 Impacts to Science at the South Pole

Impacts to other types of scientific research at the South Pole were identified and evaluated on a qualitative basis particularly related to activities that are planned or currently ongoing in the Dark Sector. The analysis was based on input obtained from the South Pole Users Committee, an advisory panel of scientists, who are actively engaged in research at the Amundsen-Scott Station.

5.2.6 Impacts to Other Science in the USAP

The impact to other science in the USAP was evaluated on a qualitative basis using logistical or operating parameters such a the airlift capabilities of the USAP and the number of projected LC-130 flights required to support Project IceCube and the Amundsen-Scott Station.

5.2.7 Second Order and Cumulative Impacts

Second order impacts were estimated on both quantitatively and qualitatively. Quantitative parameters used to identify secondary impacts included the estimated number of support staff required at McMurdo Station to prepare and stage facilities and cargo during year 1 of the Project. In addition, a qualitative review was performed to evaluate the impacts of incorporating fuel and cargo needed to support Project IceCube into existing USAP logistical support systems (e.g., annual resupply vessel).

The cumulative impacts of Project IceCube were also identified in this Comprehensive Environmental Evaluation and compared to baseline conditions at Amundsen-Scott Station. Additional cumulative impacts related to the activities expected at the South Pole during the proposed Project were qualitatively evaluated.

5.3 Environmental Impacts

This section identifies the potential environmental and operational impacts associated with the Project IceCube (Alternative A), taking into consideration changes which may occur depending upon the operating option (i.e., A1, A2, A3) that is implemented. For each operating option, it is assumed that Project IceCube has an service life of at least 15 years. For Options A1 and A3, year 1 of the Project corresponds to the 2004 austral season (i.e., October 2003 through September 2004). For Option A2 (i.e., delayed start), year 1 of the Project corresponds to the 2008 austral season (i.e., October 2007 through September 2008). During the installation of the neutrino telescope (i.e., project years 1 through 7), potential impacts may vary from year-to-year depending on the level of activity that is performed. After installation of the telescope is complete (i.e., year 8), the impacts are not expected to change significantly on an annual basis. The potential impacts were evaluated relative to the baseline conditions at the South Pole in the absence of Project IceCube.

The analysis of environmental and operational impacts focuses on physical disturbance, air quality, releases to the environment, and impacts to other science at the South Pole or in other areas of the USAP. Impacts to flora and fauna are not expected since the extremely dry, cold, snow-covered ice sheet does not support local biota or human populations. In addition, the proposed activities are not located near any Antarctic Specially Protected Areas (ASPAs), Sites of Special Scientific Interest (SSSI), marine areas, or lakes where localized impacts could affect nearby receptors.

The assessment of the potential environmental impacts described below assumes that selected mitigating measures described in Chapter 6.0 would have already been included in certain design and operational components of Project IceCube. The benefits derived from the use of additional mitigating measures, if deemed feasible, may further reduce potential environmental impacts.

5.3.1 Physical Disturbance to Snow/Ice Environment

Physical disturbance of the snow and the subsurface ice sheet would be a certain outcome resulting from the installation of the high-energy neutrino telescope at the South Pole, and would occur in each of the operating options under consideration. The Project activities would take place within the Dark Sector of the Amundsen-Scott Station, an area designated for scientific experiments and associated support facilities, portions of which have previously been disturbed to support other scientific investigations. Physical disturbances resulting from the proposed Project would primarily result from drilling activities, operation of the Tower Operations and Seasonal Equipment Sites, and installation of cables and Counting House. Physical disturbances would be minimized by confining the activities to the area of the array and by incorporating some previously disturbed areas of the Dark Sector, including groomed access pathways.

Figure 3-3 depicts the proposed Project IceCube array location on a site map. Of the square kilometer of the proposed array, approximately 150,000 square meters (15 percent) would be located in previously disturbed areas, including areas adjacent to the existing Dark Sector structures (e.g., VIPER, MAPO, AASTO), AMANDA and SPASE-2 arrays, and related access pathways. In each of the operating options, approximately 850,000 square meters of previously unaltered surface at the South Pole would be disturbed as a result of Project IceCube activities, representing a relatively small portion of the 100 square kilometer area of disturbed area at the South Pole.

Within the one square kilometer area encompassing the array, holes approximately 60 cm in diameter would be drilled in the ice sheet at 80 locations and to a depth of 2,450 meters, resulting in the displacement of 693 cubic meters of the ice per hole and 55,400 cubic meters total. In addition, the 160 IceTop tanks would displace 3.6 cubic meters of snow each resulting in the alteration of approximately 576 cubic meters of the snow firn. Realizing that the deep array holes and IceTop tanks would be equipped with detectors, filled with water created by melting snow and ice, and allowed to refreeze, the alteration of the terrain would not result in a substantive physical change; therefore, the resulting environmental impacts is expected to be negligible.

The surface terrain in proximity to the Project IceCube array would be disturbed through the installation of electrical cables (e.g., power, control, detectors) and piping (e.g., fuel, water). Some cabling and piping would only be needed during the installation of the detector arrays. Cables would be buried more than 1 meter in the snow surface using trenching equipment and would be covered using native snow material from adjacent areas to match the surrounding contour. Cabling needed to power and operate the detector modules and associated cable vaults at the Counting House would remain in-place for the service life of the telescope and beyond, if irretrievable. Electrical cables used to provide power to the temporary Seasonal Equipment Site structures would be placed in cable trays, wooden utility containers, or would lie on the snow surface and would be retrieved at the completion of activities each year of the 6-year drilling period. Water and fuel hoses would either be insulated or raised off the snow surface and would also be retrieved each year. Hoses and cables that cross planned access pathways would be enclosed inside metal culverts placed beneath the snow surface that will be removed at the end of the installation period.

The terrain in the vicinity of the Project IceCube would also be altered by activities associated with operation of the Tower Operations and Seasonal Equipment Sites such as the development and maintenance of access pathways, preparation of the surfaces (i.e., leveling) for equipment or structures, removal of snow accumulation surrounding the structures, and the creation of snow berms for storage of structures or materials. These activities would be confined to the designated one square kilometer area of the array. In addition, terrain disturbance would be further controlled because the facilities would be moved annually to a centralized location near the holes scheduled to be drilled that year. At the

completion of all drilling activities, the Tower Operations and Seasonal Equipment Site facilities would be demobilized and moved to designated storage areas or berms.

The surface terrain disturbances at the South Pole associated with Project IceCube would have a short-term effect on the environment and would be negated by the accumulation of new and blowing snow. Approximately 20 centimeters of new snow accumulates at the South Pole each year and does not melt.

Subsurface cavities known as Rodriguez wells would be constructed and used each year during the six-year drilling period to supply water for the drilling process. Each subsurface well would occupy approximately 757 cubic meters of space. Only one well would be constructed annually and it would be located adjacent to the current Seasonal Equipment Site. At the end of the summer season, the Seasonal Equipment Site would be moved to a storage berm and the subsurface Rodriquez well would be abandoned, allowing the water to refreeze. No impacts are expected from the abandonment of the wells.

5.3.2 Air Emissions

As a result of Project IceCube activities, emissions from the combustion of petroleum hydrocarbon fuels and fuel evaporation byproducts would be released to the atmosphere. These emissions would originate from power generators, heaters, heavy equipment, vehicles, other ancillary equipment, and aircraft used to support the Project.

5.3.2.1 Air Emissions from Land-Based Equipment

Table 5-1 summarizes the estimated amount of fuel that would be used for power generation, space and water heating, and other equipment (e.g. heavy equipment, vehicles) to support Project IceCube activities at the South Pole. Air emissions from fuel consumption would occur during the installation period (years 1 through 7) and during the operation of the neutrino telescope (year 8 and beyond). Fuel consumption would be the same for each of the operating options (A1, A2, and A3). The air emissions estimates take into account the use of new, fuel-efficient equipment (e.g., generators, water heaters) and the recovery of waste heat from power generators which are measures that have been designed into the proposed action.

Table 5-1. Estimated Fuel Consumption at the Amundsen-Scott Station During Project IceCube

Project Year	Amundsen-Scott Station (liters) [1]					Project IceCube (liters)						Increase [2]
	Diesel			Gasoline		Diesel				Gasoline		
	Power Generation and Water Production	Heating (space)	Equipment Operation	Equipment Operation	Subtotal (all fuels)	Power Generation and Water Production	Heating (water)	Heating (space)	Equipment Operation	Equipment Operation	Subtotal (all fuels)	
1	1,194,480	181,440	136,080	15,000	1,527,000	0	0	0	16,632	1,000	17,632	1%
2	1,343,790	204,120	153,090	15,000	1,716,000	30,240	66,528	12,096	12,096	2,000	122,960	7%
3	1,343,790	204,120	153,090	15,000	1,716,000	90,720	199,584	36,288	36,288	2,000	364,880	21%
4	1,343,790	204,120	153,090	15,000	1,716,000	120,960	266,112	48,384	48,384	2,000	485,840	28%
5	1,343,790	204,120	153,090	15,000	1,716,000	120,960	266,112	48,384	48,384	2,000	485,840	28%
6	1,343,790	204,120	153,090	15,000	1,716,000	120,960	266,112	48,384	48,384	2,000	485,840	28%
7	1,343,790	204,120	153,090	15,000	1,716,000	120,960	266,112	48,384	48,384	2,000	485,840	28%
SUB-TOTAL	**9,257,220**	**1,406,160**	**1,054,620**	**105,000**	**11,823,000**	**604,800**	**1,330,560**	**241,920**	**258,552**	**13,000**	**2,448,832**	**21%**
8+	1,343,790	204,120	153,090	15,000	1,716,000	0	0	11,340	1,134	200	12,674	1%

NOTE: [1] Projected fuel use for normal operations at the Amundsen-Scott Station excluding Project IceCube.
[2] Increased fuel consumption (percentage) as a result of Project IceCube.

Table 5-1 also identifies the quantity of fuel expected to be used at the Amundsen-Scott Station exclusive of Project IceCube. Cumulatively, Project IceCube activities are expected to cause a 21 percent increase in the quantity of fuel consumed at the Amundsen-Scott Station. The increased quantity of fuel handled and used at the South Pole to support the proposed action could potentially cause a slight increase in the number of accidental releases (i.e., spills) which occurs at the Station (see Section 6.0).

Using the fuel consumption rates presented in Table 5-1, fuel combustion exhaust emissions from land-based equipment were estimated using actual stack testing data and models developed by the U.S. EPA. Table 5-2 summarizes the emissions for selected characteristic air pollutants (i.e., sulfur oxides (SO_2), nitrogen oxides (NOx), carbon monoxide (CO), and particulate matter (PM)). Additional air emissions data for other fuel combustion byproducts are provided in Appendix B.

Project IceCube activities are expected to increase fuel combustion air emissions at the South Pole by approximately 9 percent for carbon monoxide to 78 percent for sulfur oxides. Differences in the incremental increase in air emissions by constituent is related to the type of equipment (i.e., source) in which the fuel is combusted. Operating Option A2 would yield exhaust emissions equivalent to those present in Table 5-2 but would occur in a later timeframe. Once the array installation operations are complete in Project year 7, air emissions would essentially drop down pre-Project IceCube (i.e., baseline) levels.

Table 5-2. Air Emissions From Land-Based Fuel Combustion Sources at the South Pole During Project IceCube

Project Year	Fuel Use (liters)	Selected Fuel Combustion Byproducts			
		Sulfur Oxides (kg)	Nitrogen Oxides (kg)	Carbon Monoxide (kg)	Particulates (kg)
Amundsen-Scott Station (Baseline Conditions) [1]					
1	1,527,000	2,112	63,515	30,828	927
2	1,716,000	2,374	71,433	33,788	1,042
3	1,716,000	2,374	71,433	33,788	1,042
4	1,716,000	2,374	71,433	33,788	1,042
5	1,716,000	2,374	71,433	33,788	1,042
6	1,716,000	2,374	71,433	33,788	1,042
7	1,716,000	2,374	71,433	33,788	1,042
Subtotal	11,823,000	16,358	492,110	233,559	7,180
8+	1,716,000	2,374	71,433	33,788	1,042
Project IceCube (planned number of holes drilled in the ice sheet)					
1 (0)	17,632	63	748	783	61
2 (4)	122,960	636	2,558	1,632	190
3 (12)	364,880	1,904	7,627	2,991	567
4 (16)	485,840	2,539	10,161	3,670	756
5 (16)	485,840	2,539	10,161	3,670	756
6 (16)	485,840	2,539	10,161	3,670	756
7 (16)	485,840	2,539	10,161	3,670	756
Subtotal	2,448,832	12,759	51,576	20,088	3,842
8+	12,674	4	52	116	4

NOTE: [1] Baseline conditions represent operations that will be conducted to support scientific activities at the Amundsen-Scott Station excluding Project IceCube.

Ambient air quality in the vicinity of the South Pole is not expected to be degraded as a result of Project IceCube activities. Ambient air monitoring has not been conducted downwind of the operations sector at the Amundsen-Scott Station, however, ambient air monitoring data are available for McMurdo Station and may be used for comparison. McMurdo Station, which annually consumes more than three times the volume of fuel that is projected for the Station and the Project combined, was found to be well below U.S. Ambient Air Quality Standards suggesting the fuel combustion emissions at the South Pole will not significantly impact air quality.

Although most gaseous fuel combustion emissions dissipate in the atmosphere, carbonaceous aerosols (i.e., black carbon) have been detected at very low concentrations downwind of exhaust emissions sources in the Antarctic (references 15, 16, 17). The potential impacts from the deposition of substantial amounts of carbonaceous aerosols and other combustion-related particulates are derived from alterations of the surface albedo and modifications of snow and ice chemistry due to catalytic activity. It is expected that gaseous emissions would dissipate and particulate emissions although potentially detectable and visible are not expected to accumulate to levels which would alter the physical and chemical properties of the terrain or create adverse impacts.

Despite the extremely cold conditions, fuel evaporative losses are another category of emissions to the atmosphere that are expected to occur at the South Pole which are caused by the storage, handling, and use of fuel. Fuel may be volatilized when storage tanks are filled and vented vapors are displaced. Using estimated fuel consumption data, fuel volatilization emissions (Table 5-3) were estimated by applying models developed by the U.S. EPA. Calculations used to support these estimates are provided in Appendix C. Although fuel evaporative emission estimates are highly conservative, emissions at the Amundsen-Scott Station may increase annually by as much as 18 percent as a result Project IceCube activities. Project IceCube would have little effect on the Station's evaporative emissions once activities are complete to install the telescope.

Table 5-3. Summary of Fuel Evaporative Emissions During Project IceCube (all fuels)

Project Year	Fuel Use (L/yr)		Evaporative Emissions (kg/yr) [1]		
	Baseline Conditions [1]	Project IceCube	Baseline Conditions [1]	Project IceCube	Change from Baseline (%)
1	1,527,000	17,632	58.5	2.9	5%
2	1,716,000	122,960	60.8	6.8	11%
3	1,716,000	364,880	60.8	9.8	16%
4	1,716,000	485,840	60.8	11.2	18%
5	1,716,000	485,840	60.8	11.2	18%
6	1,716,000	485,840	60.8	11.2	18%
7	1,716,000	485,840	60.8	11.2	18%
Subtotal	11,823,000	2,448,832	423	64	15%
8+	1,716,000	12,674	60.8	0.7	1%

NOTE: [1] Baseline conditions represent operations that will be conducted to support scientific activities at the Amundsen-Scott Station excluding Project IceCube.

It should be noted that the fuel volatilization emissions presented in Table 5-3 and Appendix C are derived for an average ambient working temperature of 2 ^{0}C and represent very conservative estimates. The actual vapor emissions released would be much less than the estimates due to the extremely low

temperatures at the South Pole. Therefore, fuel evaporative emissions would not significantly impact air quality at the South Pole.

5.3.2.2 Air Emissions from Aircraft

Air emissions from the combustion of fuel in aircraft (e.g., LC-130 and C-141) used to provide logistical support to Project IceCube would occur along various flight paths in Antarctica. Estimated exhaust emissions from aircraft providing both inter- and intracontinental support for Amundsen-Scott Station operations were calculated using EPA models and are summarized in Table 5-4. Supporting calculations for the air emissions estimates are presented in Appendix D.

Implementation of Project IceCube would cause a 17 (sulfur oxides) to 20 percent (particulates) increase in air emissions from aircraft typically used to support USAP operations at the South Pole compared to baseline conditions. Since most of the emissions occur when the aircraft are traveling at cruise altitude and speed, the emissions are expected to disperse and would not adversely impact regional air quality. Emissions from LC-130 aircraft landing and takeoff operations and short idling periods at the South Pole are dispersed by steady winds and are not expected to adversely impact air quality at the South Pole.

Table 5-4. Air Emissions from Aircraft Supporting Activities at the Amundsen-Scott Station

Project Year	Inter-continental Missions [1]	Intra-continental Missions [2]	Fuel Combustion Byproducts (kg)				
			Sulfur Oxides	Nitrogen Oxides	Carbon Monoxide	Exhaust Hydrocarbons	Particulates
Baseline Conditions [3]: C-130/LC-130 Aircraft							
1	6	300	6,968	55,310	34,422	14,704	15,050
2	6	250	5,993	47,602	29,246	12,399	12,930
3	6	241	5,817	46,215	28,315	11,984	12,548
4	6	235	5,700	45,290	27,693	11,707	12,293
5	6	228	5,563	44,211	26,969	11,384	11,997
6	6	219	5,388	42,824	26,037	10,970	11,615
7	6	227	5,544	36,107	29,246	10,970	12,930
8	6	186	5,993	47,602	26,865	11,338	11,954
Subtotal	48	1,886	46,965	365,161	228,794	95,455	101,316
C-141 Aircraft							
1 - 8	26	N/A	1,647	16,525	7,246	3,702	16,189
C-17 Aircraft							
1 - 8	6	N/A	380	14,413	514	43	697
Baseline Total	**80**	**1,886**	**48,992**	**396,099**	**236,554**	**99,200**	**118,201**
Project IceCube: C-130/LC-130 Aircraft							
1	0	40	780	6,166	4,140	1,844	1,696
2	0	55	1,073	8,478	5,693	2,536	2,333
3	0	52	1,015	8,016	5,383	2,397	2,205
4	0	58	1,132	8,941	6,004	2,674	2,460
5	0	60	1,171	9,249	6,211	2,766	2,545
6	0	60	1,171	9,249	6,211	2,766	2,545
7	0	46	897	7,091	4,761	2,121	1,951
8	0	4	78	617	414	184	170
Subtotal	0	375	7,316	57,806	38,816	17,288	15,904
C-141 Aircraft [4]							

Table 5-4. Air Emissions from Aircraft Supporting Activities at the Amundsen-Scott Station

Project Year	Inter-continental Missions [1]	Intra-continental Missions [2]	Fuel Combustion Byproducts (kg)				
			Sulfur Oxides	Nitrogen Oxides	Carbon Monoxide	Exhaust Hydrocarbons	Particulates
1 - 8	13	N/A	824	8,263	3,623	1,851	8,094
C-17 Aircraft							
1 - 8	0	N/A	0	0	0	0	0
IceCube Total	**13**	**375**	**8,140**	**66,069**	**42,439**	**19,139**	**23,998**

NOTES: N/A = Not Applicable
[1] Intercontinental mission represents a roundtrip between Antarctica and New Zealand; flight hours below 60°S are assumed to be 50 percent of the total flight hours.
[2] Intracontinental mission represents a roundtrip between two Antarctic locations, including the South Pole.
[3] Baseline conditions include science support at the Amundsen-Scott Station excluding Project IceCube.
[4] C-141 flights only Project Year 1; depending on availability, C-17 aircraft may be used in place of C-141.

5.3.3 Releases to Snow/Ice Environment

Various materials would be deployed on or into the snow-covered ice sheet at the South Pole during the installation of the high-energy neutrino telescope. Some of these items may either be intentionally left in-place or may not be retrieved because it would not be feasible or practical to do so. These releases would include the array strings, detectors, and cables buried deep in the ice sheet, wastewater from personnel support activities, materials that may become lost or encrusted in snow and ice, and substances accidentally released to the environment (e.g., spills).

5.3.3.1 Array Components

Various components comprising the neutrino telescope array are designed to be installed and imbedded into the ice sheet and would not be recovered essentially becoming an irretrievable release to the environment. Table 5-5 identifies the type of equipment that would be deployed into the ice sheet during Project IceCube. Each of the 80 deep array strings would have a total of 60 DOMs placed at depths ranging from 1,450 meters to 2,450 meters (Figure 3-4), and would include cables connecting the array to the surface. In addition, four DOMs would be installed in two IceTop tanks located 1 meter below the surface and adjacent to each of the 80 array strings. Cables connecting the IceTop tanks to the Counting House would be installed beneath the snow surface.

Table 5-5. Project IceCube Array Components Released to the Environment

Item	Units	Locations	Total Released
Digital Optical Module - deep array • optical sensor • electronic circuit board • HV generator • flasher board • magnetic shield • glass pressure housing • optical silicone gel	60	80	4,800
Cable - deep array	2,450 meters	80	196,000 meters

Table 5-5. Project IceCube Array Components Released to the Environment

Item	Units	Locations	Total Released
Digital Optical Module - surface array (same components as deep array modules)	2	160	320
Tanks – surface array			
• polyethylene, with polyurethane insulation	1	160	160
• wooden top	1	160	160
• pumps	2	160	320
Cable - surface array	≤ 1,000 meters	80	≤ 80,000 meters

At the completion of the Project IceCube, numerous components of the array would have been deeply encased in the ice sheet and rendered virtually irretrievable. Surface components of the array (e.g., cables, IceTop DOMs) may be accessible and would be removed at the completion of activities. All of these inert materials would be isolated in the ice sheet and would not adversely impact the surrounding environment. Future use of the area containing the imbedded array components would have to be planned accordingly.

5.3.3.2 Wastewater Discharge

Sanitary wastewater generated by Project personnel while occupying primary structures at the Amundsen-Scott Station would be discharged to ice pits (i.e., sewage bulbs) as allowed by the Waste Regulation (45 CFR §671). Wastewater generated in washroom and toilet facilities at the Project site would be containerized and managed as a nonhazardous solid waste. Wastewater generated by Project IceCube personnel is expected to originate solely from domestic sources and consist of blackwater (i.e., urine and human solid waste) and greywater containing freshwater and trace residues of soap, food particles, and personal care products. The discharge of non-domestic substances or hazardous materials into the wastewater system would be avoided through the implementation of strict USAP waste management practices that are already in place at the Amundsen-Scott Station and other USAP facilities.

The quantity of wastewater generated at the Amundsen-Scott Station including the contribution from Project IceCube personnel can be estimated based on the volume of potable water historically used at the Station, 94.5 liters per person per day (austral summer) and 136 liters per person per (austral winter). Table 5-6 presents the volume of wastewater expected to be discharged based on population. It is estimated that Project IceCube personnel would cause the total volume of wastewater discharged at the South Pole to increase as much as 24 percent in a year.

Table 5-6. Wastewater Discharge Based on Population at the South Pole During Project IceCube

Project Year	Population (person-days) [1]		Wastewater Discharge (liters)			
	Baseline Conditions [2]	Project IceCube [3]	Baseline Conditions [2]	Project IceCube [3]	Change from baseline	Total
1	42,856	2,160	4,775,146	204,120	4%	4,979,266
2	41,314	9,456	4,565,434	1,021,578	22%	5,587,012
3	39,489	7,292	4,339,644	731,756	17%	5,071,400
4	37,895	7,035	4,167,680	696,804	17%	4,864,484
5	24,730	7,035	2,870,260	696,804	24%	3,567,064
6	24,730	7,035	2,870,260	696,804	24%	3,567,064

Table 5-6. Wastewater Discharge Based on Population at the South Pole During Project IceCube

Project Year	Population (person-days) [1]		Wastewater Discharge (liters)			
	Baseline Conditions [2]	Project IceCube [3]	Baseline Conditions [2]	Project IceCube [3]	Change from baseline	Total
7	24,730	7,035	2,870,260	696,804	24%	3,567,064
Subtotal	235,744	47,048	26,458,684	4,744,670	18%	31,203,354
8+	24,730	2,067	2,870,260	227,328	8%	3,097,588

NOTES:
[1] A person-day represents one overnight stay.
[2] Baseline conditions represent Amundsen-Scott Station operations that will be conducted to support scientific activities at the South Pole excluding Project IceCube.
[3] Project IceCube conditions representing project years for Options A1 and A3 only; for Option A2, all project years would be compared to baseline conditions represented in year 8+.

Wastewater discharged to sewer bulbs in the ice sheet will contain various pollutants. Several parameters have been used to characterize the pollutant loadings. Wastewater pollutant loadings are presented in Table 5-7. Supporting detail for the pollutant loading calculations is provided in Appendix A.

Table 5-7. Projected Wastewater Pollutant Loadings at the South Pole During Project IceCube

Project Year	Pollutant Loadings (kg)		
	Total Suspended Solids	Biological Oxygen Demand	Ammonia Nitrogen
Amundsen-Scott Station (Baseline Conditions) [1]			
1	2,014	4,286	257
2	1,942	4,131	248
3	1,856	3,949	237
4	1,781	3,790	227
5	1,162	2,473	148
6	1,162	2,473	148
7	1,162	2,473	148
Subtotal	11,080	23,574	1,414
8+	1,162	2,473	148
Project IceCube			
1	102	216	13
2	444	946	57
3	343	729	44
4	331	704	42
5	331	704	42
6	331	704	42
7	331	704	42
Subtotal	2,211	4,705	282
8+	97	207	12

NOTE: [1] Baseline conditions represent science support activities at the Amundsen-Scott Station excluding Project IceCube.

Wastewater generated by Project IceCube personnel would be discharged to existing or planned (see Figure 4-4) sewage bulbs at the Station. Each sewage bulb has a nominal capacity of 20 million liters. The volume of wastewater expected to be generated by Project personnel would increase the total volume of wastewater discharged at the Station by 1.0 million liters per year and may slightly shorten the service life of the sewage bulb. All wastewater discharged from the Amundsen-Scott Station would freeze in the ice sheet and would essentially be isolated from the surrounding environment.

In addition to the wastewater generated by Project IceCube personnel, the water heaters that are used to supply hot water for ice drilling consume diesel fuel (i.e., AN-8) and produce a condensate which may be considered a byproduct or wastewater. The condensate would be collected and reused during drilling activities. The condensate from the water heaters has been tested and found to contain trace levels of aluminum, boron, and sodium probably originating from the metallic and ceramic components used to construct the heaters. It is expected that as the water heaters are used more extensively, the metals will be leached from the system and the trace levels detected in the condensate will decrease even further. The collected condensate represents approximately 1 percent of the water which would be placed in each drill hole and allowed to freeze once the detector string had been installed. Most of the water used to fill each drill hole would originate from nearby Rodriguez wells.

5.3.3.3 Other Materials

Minor quantities of various objects such as materials used for the construction and operation of the Tower Operations and Seasonal Equipment Sites (e.g., wood, cable) may be encrusted in snow and ice and may be released to the environment if they cannot be practically removed. Each year the Seasonal Equipment Site would be relocated and it is expected that most construction and operational materials would be removed and reused, however some materials may be irretrievable. For example, plywood used to cover cable trenches, conduits used to protect cables at roadway crossings, marker flags, anchoring devices, cables, or leveling blocks used for structures or equipment may become encrusted in snow and ice and lost. While these materials represent permanent releases to the snow firn and ice sheet, these conditions occasionally occur with any operations in the Antarctic and are not expected to adversely impact the environment.

5.3.3.4 Accidental Releases

Project IceCube activities, like most operations at the Amundsen-Scott Station, involve the handling and use of various hazardous materials such as fuels. As a consequence, accidental releases occasionally occur caused by spills, leaks, or the unexpected loss of equipment. Since accidental releases are not planned, their frequency, magnitude, composition, and resulting environmental effects cannot be projected. Existing measures would continue to be implemented to prevent accidental releases to the Antarctic environment (see Chapter 6, Mitigating Measures); however, in the event that an accidental release occurs, specific procedures and resources are available to facilitate cleanup and removal of contaminated media (e.g., snow, ice) to the maximum extent practical. Project IceCube will follow the procedures contained in the *Amundsen-Scott South Pole Station Oil Spill Response Plan* (reference 7) and would develop supplemental procedures to address activities unique to the Project. To minimize these releases, appropriate spill prevention and detection devices would be used and augmented with routine inspections of fuel distribution systems and equipment. In addition, if a spill occurs it would be documented and reported consistent with the requirements of 45 CFR §671 and the *USAP Master Permit*.

Normal operations at the Amundsen-Scott Station result in several accidental releases each year involving mechanical failure or error during refueling or material handling activities. For example, during the most recent annual reporting period for the *USAP Master Permit* (i.e., March 2002 through February 2003), six

accidental spills occurred at the Station (Table 5-8), the largest of which involved the release of 57 liters of oil. The relatively low number of spills which occur at the Station is primarily due to the comprehensiveness of the procedures used and the vigilance of the personnel involved. This trend is expected to continue during Project IceCube activities as well. Although the quantity of material that may be accidentally released to the environment cannot be predicted, it is expected that releases will continue to be detected quickly and remedial action taken accordingly.

Table 5-8. Summary of Spills at the Amundsen-Scott Station (March 2002 - February 2003)

Date	Material	Quantity (L)	Quantity (GAL)	Location	Cause	Remarks
12/02/02	Oil	19	5	Heavy Shop	Failure	Blown o-ring on Mantis crane
12/04/02	Oil	11	3	Cheese Palace	Failure	Blown o-ring on Mantis crane
12/05/02	Oil	19	5	Balloon Launching Bldg	Failure	Blown o-ring on Mantis crane
12/17/02	Fuel	4	1	Taxiway, Fuel Pit 2	Error	Improper seal of nozzle
12/30/02	Oil	19	5	Cargo Berm	Error	Drum puncture
01/03/03	Oil	57	15	Heavy Shop	Failure	Crane spool control valve failure

The risk of an accidental release to the Antarctic environment may also be realized as the result of the failure of a fuel tank or other storage container including the water tanks in the EHWD system. The containers used for Project IceCube drilling and related activities will be structurally compatible with their contents and able to withstand the physical and the environmental (e.g., temperature) conditions expected to be encountered during operation and annual mobilization/demobilization. Containers (e.g., drums) that may be temporarily stored on the snow surface would be staged in a manner so that they can be effectively located and recovered without damaging the container upon retrieval. However, despite the implementation of these spill prevention and control procedures, a minimal risk exists that a tank, drum, container, or conveyance (e.g., hose, pump) may fail, be damaged, or become lost and cause the subsequent release of hazardous materials to the environment.

If an accidental release occurs, localized impacts would be expected. Consistent with established spill response procedures, corrective action involves source control followed by cleanup including the removal of contaminated snow and ice and the use of sorbent materials if the spill occurred on an impermeable surface. Contaminated snow and sorbents would be packed into drums and removed as waste. Fuel spilled on the snow at the South Pole is likely to migrate vertically and dissipate rapidly due to the snow's high porosity. In these cases, complete recovery of the fuel would not be practical; however, it may be possible to recover highly viscous liquids or solid materials more effectively. Accidental releases involving water used in the EHWD system would not contain hazardous constituents and would not require mitigation other than for safety reasons (i.e., prevent slippage on ice-covered surfaces).

Another type of release that may occur during Project IceCube could involve the accidental loss of equipment in the environment. For example, a detector string could potentially be damaged or improperly deployed rendering the unit unserviceable once it becomes frozen in the ice sheet. It is highly unlikely that an unusable detector string could be retrieved; therefore, these materials would result in a release to the environment. Although the unlikely loss of a detector string or other component may impact the progress of the Project, the environmental effect would be localized.

5.3.4 Impacts to Amundsen-Scott Station Operations

Project IceCube has been designed to utilize a combination of resources including those dedicated to the Project as well as those provided by the Amundsen-Scott Station. Dedicated staff and equipment would support most Project activities, including equipment procurement, design and operation of the Tower

Operations and Seasonal Equipment Site facilities, setup of the Counting House, drilling and array deployment, and data collection and management. Project IceCube may utilize the Amundsen-Scott Station resources (e.g., staff, space, equipment) for the following:

- Personnel support (e.g., berthing, food service)
- Equipment, vehicles and operators from station pool
- Maintenance and repair of dedicated Project equipment and vehicles
- Flight Support (e.g., air traffic control, cargo handling)
- Bulk fuel management
- Waste management
- Communications and data transfer

The proposed schedule for Project IceCube (i.e., Options A1, A2, A3) has been designed to carefully coordinate the use of needed infrastructure and logistical support systems with other users at the Amundsen-Scott Station. Adequate resources are available at the Station to support Project IceCube without compromising SPSM construction activities, other Station operations, or other scientific research.

The level of resources needed to support Project IceCube personnel (e.g., berthing space, food service) is significant. Table 5-9 presents the projected Project IceCube and Station population by operating season (i.e., austral summer, austral winter). Limited personnel support resources may be available during peak population periods each austral summer, particularly during project years 2 through 4 when the Project IceCube and SPSM activities occur simultaneously. Resource limitations will be mitigated through the careful planning and scheduling.

Table 5-9. Estimated Population at the South Pole During Project IceCube

Project Year	Austral Summer (108 days)			Austral Winter (257 days)		
	Baseline Conditions	Project IceCube	Change from baseline (%)	Baseline Conditions	Project IceCube	Change from baseline
1	235	20	9%	68	0	0 %
2	235	59	25%	62	12	19 %
3	230	58	25%	57	4	7 %
4	220	58	26%	55	3	5 %
5	110	58	53%	50	3	6 %
6	110	58	53%	50	3	6 %
7	110	58	53%	50	3	6 %
8+	110	12	11%	50	3	6 %

Project IceCube will also utilize selected equipment and vehicle resources of the Amundsen-Scott Station. In addition to the three pieces of heavy equipment and one vehicle that would be dedicated to the Project, specialized equipment may be obtained occasionally from the Station's vehicle pool. The Station's equipment is used to support a variety of operations on an as-needed basis, including other science projects, and no major conflicts are expected.

Logistical flight support services (e.g., air traffic control, cargo handling) maintained at the Amundsen-Scott Station would also be utilized by Project IceCube. Table 5-10 summarizes the projected number of flights required to the South Pole during Project IceCube. During project years 1 through 7, the number of flights to the South Pole will increase by approximately 20 percent to support Project IceCube. With advanced planning, the USAP has adequate flight support resources to simultaneously accommodate the Project, normal operations at the Station, and other scientific research at the South Pole.

Table 5-10. Estimated Number of Logistics Support Flights to the South Pole During Project IceCube

Project Year	Baseline Conditions	Project IceCube	Total	Change from Baseline
1	300	40	340	13 %
2	250	55	305	22 %
3	241	52	293	22 %
4	235	58	293	25 %
5	228	60	288	26 %
6	219	60	279	27 %
7	227	46	273	20 %
8	186	4	190	2 %
Subtotal	1,886	375	2,261	20 %
9+	186	0	186	0

The bulk fuel storage and handling systems of the Amundsen-Scott Station would be utilized by Project IceCube on a regular basis during each austral summer of the seven-year installation period to support drilling activities. The Station's fuel storage and distribution systems are typically used to supply fuel to the Summer Camp and remote science areas and would be capable of also servicing the Project's needs. Table 5-1 presented a summary of the estimated annual fuel consumption at the South Pole during Project IceCube. The total volume of fuel managed at the Amundsen-Scott Station would increase approximately 21 percent during project years 1 through 7 and 1 percent in year 8 and beyond. Because the Project has planned for the transport of the fuel to the South Pole and support staff for its distribution, the primary impact to South Pole operations would involve the management of the extra fuel needed for the Project.

Project IceCube will utilize existing waste management services at the Amundsen-Scott Station for collection, processing and transport of wastes generated by Project activities and personnel. Table 5-11 presents the projected amount of waste expected to be generated on an annual basis at the South Pole. Project-related wastes are expected to increase the amount of waste generated at the Station by 5 to 16 percent. If Project IceCube activities are delayed pending completion of SPSM (Option A2), the Project would cause the total amount of waste managed at the Station to increase by 13 percent. Sufficient resources are available to effectively manage all Station wastes including wastes generated by the Project and transport (i.e., LC-130) the wastes to McMurdo Station for subsequent retrograde to the U.S.

Table 5-11. Estimated Annual Waste Generation During Project IceCube

Project Year	Baseline Conditions	Project IceCube	Change from baseline
1	340,200	27,500	8 %
2	374,220	58,200	16 %
3	907,200	46,050	5 %
4	419,580	44,450	11 %
5	453,600	44,450	10 %
6	408,240	44,450	11 %
7	317,520	43,700	14 %
Subtotal	3,220,560	308,800	10 %
8+	317,520	12,400	4 %

Operations and scientific research projects conducted at the South Pole are supported by communications resources of the Amundsen-Scott Station, including access to a TRSS satellite (TDRS F1) and associated earth station. Some re-engineering of the earth station at the South Pole will be necessary to accommodate Project IceCube data transfer, but the bulk data transfer requirements of the Project can be met with the current TRSS satellite access and no significant impacts are expected. However, because the TRSS system is in a high risk of failure, follow-on communications and data transfer options that have currently been identified for the South Pole may be insufficient for uninterrupted bulk data transfer preferred for Project IceCube. If new facilities are needed at the Amundsen-Scott Station in the future, they will be addressed in a separate environmental assessment document.

5.3.5 Impacts to Science at the South Pole

Project IceCube has been designed to minimize the impacts to other science at the South Pole by providing dedicated staff, facilities, and equipment, where feasible. Nonetheless, Project IceCube is a resource-intensive project which has the potential to affect other science activities at the South Pole. The proposed 8-Meter Telescope is one major science project that has been planned for installation at the South Pole during the same time that Project IceCube detectors are being installed. Other unidentified research projects which are still in the development stages could potentially be delayed or scaled-down if they are proposed to occur during periods when the Station's resources are functioning near maximum levels.

Project IceCube may impact other science projects that are conducted at the South Pole. Several science projects share space in the Dark Sector including the area to be occupied by the Project IceCube array. Several researchers have identified potential effects that Project IceCube may have on other science projects at the South Pole including:

- reduced ability to groom the snow around surface structures and telescopes in the Dark Sector, because of possible damage to IceCube cables;
- increased drifting in the Dark Sector because of IceCube infrastructure;
- blockage of parts of some of the sky viewed from various telescopes by temporary or permanent IceCube structures;
- interference with infrared and cosmic background telescopes in the form of heat emission from IceCube structures, and the creation of spurious background anisotropies due to the interruption of a smooth snow surface;
- generation of radio frequency interference by electronic equipment.

The factors contributing to these potential impacts in the Dark Sector will be discussed among the science groups working at the South Pole and mitigated accordingly.

The use of satellite communications for data transfer will also be an important component of Project IceCube and Project design measures have been taken to minimize impacts on the limited capacity of the satellite systems serving the South Pole. The large amount of data expected to be generated by the Project will be filtered at the South Pole prior to transfer. However, depending upon future communications and data transfer needs of other science projects and the status of the data transfer resources available to the South Pole, the potential exists that Project IceCube will result in limiting the allocation or timing of available data transfer services. As previously discussed, if new data transfer facilities are needed at the South Pole in the future to replace the current systems, they would be addressed in a separate environmental review.

5.3.6 Impacts to Other Science in the USAP

The implementation of Project IceCube at the South Pole is not expected to result in any direct impacts to other science being conducted or planned elsewhere in Antarctica. However, the allocation of certain USAP logistical resources to the Project IceCube has the potential to affect other science in the USAP, primarily associated with the use of LC-130 airlift support. During the past several years, the USAP has averaged 400 intracontinental LC-130 missions per year, including 280 flights to support the South Pole and 120 to other field locations, totaling approximately 3,000 flight hours.

Table 5-10 summarizes the projected number of flights required to support all operations at the Amundsen-Scott Station during Project IceCube. During project years 1 through 7, approximately 22 percent of the flights to the South Pole will be needed to support Project IceCube. It is anticipated that the USAP's current airlift capability can provide this level of support. However, should conditions affecting the availability or effectiveness of logistical support deteriorate (e.g., weather, aircraft repair), flights to the South Pole or other field sites may be delayed or cancelled. Depending on priorities in the USAP, the number of flights needed to support Project IceCube may compromise airlift support available for other science or operations support missions.

5.3.7 Indirect or Second Order Impacts

It is anticipated that Project IceCube may create an indirect or second order impact at McMurdo Station associated with the logistical resources needed to support the Project. Because McMurdo Station serves as the logistics hub for the South Pole, all materials destined for Project IceCube would be shipped to McMurdo and temporarily staged prior to final transport to the South Pole. In addition, Project personnel would be temporarily housed at McMurdo Station while awaiting deployment to the South Pole and again upon redeployment to New Zealand.

The existing logistical and personnel support systems utilized at McMurdo Station and the USAP have the capacity to support projects of this scope and expected to accommodate Project IceCube without significant compromise. It is anticipated that the support provided by the annual resupply vessel, annual fuel tanker, and associated cargo and fuel handling resources, airlift capability, and waste management services maintained at McMurdo Station generally have sufficient capacity to accommodate the needs Project IceCube.

To augment McMurdo Station's cargo handling capability during year 1 of Project IceCube, it will be necessary to procure the use of an additional wheeled forklift and add cargo handling personnel (i.e., 800 person-days), to prepare and manage cargo for the Project. The increase in personnel represents less than 2 percent of the operations staff typically based at McMurdo Station during the austral summer.

5.3.8 Cumulative Impacts

A cumulative impact is the combined impact of past, present and reasonably foreseeable activities in the future. The evaluation of the primary impacts of the proposed action in relation to projected baseline conditions at the South Pole took into account the combined (i.e., cumulative) effects of each impact such as physical disturbances, air emissions, and releases to the environment.

The baseline conditions at the South Pole included all ongoing and planned activities such as SPSM, operation of the new Station, and ongoing and new science projects. The impacts of baseline operations including the combined impacts associated with the efforts needed to sustain Station operations and support a variety scientific research activities were previously evaluated in the *U.S. Antarctic Program Final Supplemental Environmental Impact Statement* (reference 8) and *Final Environmental Impact Statement for Modernization of the Amundsen-Scott South Pole Station*, Antarctica (reference 9), and were found to yield no significant long-term impacts to the environment at the South Pole.

Because NSF carefully funds, administers, and oversees the resources needed to sustain operations at the Amundsen-Scott Station, it is unlikely that cumulative level of activities at the South Pole including Project IceCube will exceed the capacity of the Station. Because Project IceCube has been designed and scheduled to function within the operational constraints of the Station and the USAP, it is also unlikely that the Project will generate impacts that exceed the nature or extent of the impacts that were previously identified for baseline operations. In addition, there are no known plans by other nations to construct facilities at the South Pole thereby adding to the cumulative impacts caused by Project IceCube.

5.3.9 Unavoidable Impacts

Unavoidable impacts are those which are inherent to the proposed action and cannot be fully mitigated or eliminated if the Project is implemented. For Project IceCube, an unavoidable impact involves the installation of the neutrino telescope (e.g., detectors, cable) in the ice sheet and its eventual abandonment (i.e., release) at the end of the telescope's service life. Other unavoidable impacts include the physical disturbance of ice sheet in the area where the telescope will be deployed, air emissions caused by the combustion of fuel in equipment used to support the Project, and wastewater generated by Project activities and discharged to the ice sheet.

5.4 Summary of Impacts

The potential impacts resulting from the performance of Project IceCube have been identified and evaluated consistent with the *Guidelines for Environmental Impact Assessment in Antarctica* (reference 1). Table 5-12 summarizes the criteria used to evaluate the significance of the potential impacts relative to the extent, duration, and intensity of each activity as well as the probability of its occurrence. Consistent with these criteria, Table 5-13 summarizes all potential environmental and operational impacts that may be caused the Project. Because of the reoccurring and seasonal nature of many of the activities in Project IceCube, some of the impacts identified on Table 5-13 represent short-term events which occur during multiple years of the project. Table 5-13 also identifies the research benefits of Project IceCube.

Table 5-12. Criteria for Assessment of Potential Impacts on the Environment

		Criteria			
Impact	**Environment**	**Low (L)**	**Medium (M)**	**High (H)**	**Very High (VH)**
EXTENT OF IMPACT	*Air* *Snow/ice* *Terrestrial* *Aesthetic & Wilderness*	*Local extent* Confined to the *site* of the activity.	*Partial extent* Some parts of an *area* are partially affected.	*Major extent* A major sized *area* is affected.	*Entire extent* Large-scale impact; causing further impact.
DURATION OF IMPACT	*Air* *Snow/ice* *Terrestrial* *Aesthetic & Wilderness*	*Short term* Several weeks to one season; short compared to natural processes.	*Medium term* Several seasons to several years; impacts are reversible.	*Long term* Decades; impacts are reversible.	*Permanent* Environment will suffer permanent impact.
	Air	*Minimal Affect*	*Affected*	*High*	*Irreversible*

Table 5-12. Criteria for Assessment of Potential Impacts on the Environment

		Criteria			
Impact	**Environment**	**Low (L)**	**Medium (M)**	**High (H)**	**Very High (VH)**
INTENSITY OF IMPACT	*Snow/ice Terrestrial Aesthetic & Wilderness*	*Minimal Affect*	*Affected*	*High*	*Irreversible*
PROB-ABILITY		Natural functions and processes of the environment are minimally affected. Reversible.	Natural functions or processes of the environment are affected, but are not subject to long-lasting changes. Reversible.	Natural functions or processes of the environment are affected or changed over the long term. Reversibility uncertain.	Natural functions or processes of the environment are permanently disrupted. Irreversible or chronic changes.

Table 5-13. Summary of Environmental and Operational Impacts from Project IceCube

			Environmental and Operational Impacts (legend Table 5-12)					Mitigating Measures (Table 6-1)
Activity	**Duration of Activity**	**Output**	**Affected Environment**	**Extent**	**Duration**	**Intensity**	**Probability**	
Drilling and Array Installation								
Drilling Camp Mobilization	austral summer, project year 1 (90 days); project years 2 – 7 (21 days)	Emissions	Air	M	L (event) M (project)	L	VH	2.1 – 2.3
			Snow/Ice	M	M(event) M (project)	L	VH	2.1 – 2.3
		Physical Disturbance – terrain alteration	Snow/Ice	L	L (event) M (project)	L	VH	1.1 – 1.4
		Physical Dist. - noise, vibration, heat, EM radiation	Snow/Ice	L	L (event) M (project)	L	M	1.1 – 1.4
			Other Research Projects	L	L (event) M (project)	L	L	5.1 – 5.2
Rodriguez Well Operation	one well per summer, project years 2 - 7	Physical Disturbance– terrain alteration	Snow/Ice	L	L (event) M (project)	L	VH	1.1 – 1.4
Power Generation	90 days per summer, project years 2 – 7	Emissions	Air	L	L (event) M (project)	L	VH	2.1. – 2.3
			Snow/Ice	M	L (event) M (project)	L	VH	2.1 – 2.3
Fuel Storage and Handling	90 days per summer, project years 2 – 7	Evaporative Emissions	Air	L	L (event) M (project)	L	H	2.1 – 2.3
		Accidental Releases/Spills	Snow/Ice	M	L (event) M (project)	M	M	3.1 – 3.19

Table 5-13. Summary of Environmental and Operational Impacts from Project IceCube

			Environmental and Operational Impacts (legend Table 5-12)					Mitigating Measures (Table 6-1)
Activity	**Duration of Activity**	**Output**	**Affected Environment**	**Extent**	**Duration**	**Intensity**	**Probability**	
Drilling/ Array/Cable Deployment (includes water heating for EHWD)	59 days per summer, project years 2 - 7	Emissions	Air	L	L (event) M (project)	L	VH	2.1 – 2.3
			Snow/Ice	M	L (event) M (project)	L	VH	2.1 – 2.3
		Physical Disturbance – terrain alteration	Snow/Ice	L	L (event) M (project)	L	VH	1.1 – 1.4
		Physical Dist. - noise, vibration, heat, EM radiation	Snow/Ice	L	L (event) M (project)	L	H	1.1 – 1.4
			Other Research Projects	L	L (event) M (project)	L	L	5.1 -5.2
Hazardous Materials Management	daily, project years 1 - 7	Accidental Releases/Spills	Snow/Ice	L	M	M	L	3.1 – 3.19 8.0
Waste Management	90 days per summer, project years 1 – 7	Nonhazardous and Hazardous Wastes	Station Operations	L	L (event) M (project)	L	VH	4.0, 9.1 – 9.2, 10.0
		Accidental Releases/Spills	Snow/Ice	L	L (event) M (project)	L	L	3.1 – 3.19
Personnel Support (berthing, food services)	daily, project years 1 - 7	Wastewater discharge	Snow/Ice	L	M	M	VH	3.1. 3.19
		Increased population	Station Operations	L	M	L	VH	4.0, 10.0
Drilling Camp Demobilization	10 days per summer, project years 1 – 7	Release of Irretrievable Materials	Snow/Ice	L	L (event) M (project)	L	M	3.1 – 3.19, 7.1 – 7.3, 10.0
Drilling Camp Storage	austral winter, project years 2 - 6	Release of Irretrievable Materials	Snow/Ice	L	L (event) M (project)	L	M	3.1 – 3.19, 7.1 – 7.3, 10.0

Table 5-13. Summary of Environmental and Operational Impacts from Project IceCube

			Environmental and Operational Impacts (legend Table 5-12)					Mitigating Measures (Table 6-1)
Activity	**Duration of Activity**	**Output**	**Affected Environment**	**Extent**	**Duration**	**Intensity**	**Probability**	
Logistics Support – Equipment Operation (vehicles, heavy equipment, tools)	90 days per summer, project years 1 – 7	Emissions	Air	L	L (event) M (project)	L	H	2.1 – 2.3
			Snow/Ice	L	L (event) M (project)	L	H	2.1 – 2.3
		Physical Disturbance - noise, vibration, heat, EM radiation	Snow/Ice	L	L (event) M (project)	L	H	5.1 – 5.2
			Other Research Projects	L	L (event) M (project)	L	L	5.1 – 5.2
		Increased use and maintenance of equipment	Station Operations	L	L (event) M (project)	L	H	4.0
Logistics Support – Aircraft Operation (LC-130)	austral summer, project years 1 – 8	Emissions	Air	H	L (event) M (project)	L	VH	2.1 – 2.3
			Snow/Ice	H	L (event) M (project)	L	VH	2.1 – 2.3
		Increased number of flights	Station Operations	L	L (event) M (project)	L	VH	4.0
Logistics Support – Aircraft Operation (C-141 Aircraft)	austral summer, project year 1	Emissions	Air	H	L	L	H	2.1 – 2.3
			Snow/Ice	H	L	L	H	2.1 – 2.3
		Increased number of flights	McMurdo Station Operations	L	L	L	H	6.0
Logistics Support - Cargo Management (McMurdo Station)	austral summer, project year 1	Increased staff, equipment use, cargo storage space	McMurdo Station Operations	L	L	M	H	6.0

Table 5-13. Summary of Environmental and Operational Impacts from Project IceCube

			Environmental and Operational Impacts (legend Table 5-12)					Mitigating Measures (Table 6-1)
Activity	**Duration of Activity**	**Output**	**Affected Environment**	**Extent**	**Duration**	**Intensity**	**Probability**	
Telescope Operation								
Data collection and processing	daily, service life of the telescope	Increased electrical load; use of lab space in Pod B2	Station Operations	L	H	L	VH	4.0, 5.1 – 5.3
Data transfer	daily, service life of the telescope	Increased use of satellite resources	Station Operations	L	H	M	VH	4.0, 5.1 – 5.3
Personnel Support (berthing, food services)	daily, service life of the telescope	Wastewater discharge	Snow/Ice	L	H	L	H	3.1 – 3.19
		Increased population	Station Operations	L	H	L	H	4.0, 10.0
Waste Management	daily, service life of the telescope	Increased waste generation	Station Operations	L	H	L	H	4.0, 9.1 – 9.2, 10.0
		Accidental Releases/Spills	Snow/Ice	L	H	L	L	3.1 – 3.19
Release of Irretrievable Materials	Project completion	Release of irretrievable materials (array components)	Snow/Ice	L	H	H	VH	3.1 – 3.19, 10.0
Research Benefits								
Neutrino Detection	service life of the telescope	Data Pertaining to: • Gamma Ray Bursts • Supernova Bursts • Active Galactic Nuclei (AGN) • Supernova Remnants (SNR) • Weakly	International Astrophysics Science Community	H (widespread benefits to science)	H (data will be available for decades)	VH (knowledge gained from research likely to enhance understanding of high energy astrophysical particles	H	Not Applicable

Table 5-13. Summary of Environmental and Operational Impacts from Project IceCube

			Environmental and Operational Impacts (legend Table 5-12)					Mitigating Measures (Table 6-1)
Activity	**Duration of Activity**	**Output**	**Affected Environment**	**Extent**	**Duration**	**Intensity**	**Probability**	
		Interacting Massive Particles (WIMPs) • Other particles from astrophysical sources						

6.0 MITIGATION OF ENVIRONMENTAL IMPACTS AND MONITORING

6.1 Introduction

This chapter describes measures that have been incorporated into the design of Project IceCube, would be implemented in the future, or are under consideration to mitigate (i.e., reduce or avoid) impacts to the environment resulting from the Project. This section also describes the activities that will be conducted to monitor and document impacts of the proposed action and, if appropriate, trigger corrective action.

6.2 Mitigating Measures

Mitigating measures applicable to Project IceCube are presented in Table 6-1 including measures which have been already incorporated into the design of the Project. The mitigating measures described in Table 6-1 specifically relate to the potential impacts discussed in Section 5 and include:

- Physical Disturbance to Snow/Ice Environment
- Air Emissions
- Releases to Snow/Ice environment
- Impacts to Amundsen-Scott Station Operations
- Impacts to Science Support at the South Pole
- Impacts to Other Science in the USAP

In addition, Table 6-1 includes migrating measures applicable to the environmental requirements of the *USAP Master Permit* such as the management of Designated Pollutants (i.e., hazardous materials), the management and disposition of all wastes (hazardous and nonhazardous), the control of all substances released to the environment, and the monitoring of environmental conditions and impacts.

Table 6-1. Summary of Mitigating Measures

Aspect	Mitigating Measure
Physical Disturbance to Snow/Ice Environment (1.0)	1.1 Limit the amount of new disturbance at the South Pole by designing Project IceCube to utilize functional areas which have been designated and used for scientific research (i.e., Dark Sector)
	1.2 Limit the amount of disturbance that may result from drilling and array deployment by incorporating the use of a fixed, centralized support infrastructure into Project activities and schedule
	1.3 Minimize the footprint of the Project site in the Dark Sector by: • Limiting the facilities (e.g., structures) and dedicated equipment (e.g. vehicles) to the amount needed to support drilling and array deployment activities • Designating areas to be used for support logistics (e.g., access pathways, vehicle and equipment storage, cargo storage)
	1.4 Avoid long-term disturbances at the Project site by decommissioning and removing all Project facilities (e.g., structures) and dedicated equipment (e.g., vehicles) at the end of drilling and array deployment period
Air Emissions (2.0)	2.1 Minimize impacts resulting from the dispersal of air emissions (e.g., fuel combustion byproducts) by locating Project facilities in areas that will prevent interference to downwind receptors (e.g., atmospheric research projects) at the South Pole
	2.2 Minimize fuel used by the Project infrastructure (e.g. power generation, water production, heating equipment) by utilizing components that conserve energy, maximize fuel combustion efficiency, and incorporate heat recovery systems, where feasible
Releases to the Snow/Ice Environment (3.0)	3.1 Prevent the release of operational materials by operating and maintaining Project facilities and components in such a manner to prevent them from becoming encrusted in snow and ice and becoming irretrievable (e.g., snow removal, annual demobilization)
	3.2 Avoid the use and possible release of chemical agents needed with certain drilling methods (e.g., drilling fluids) by utilizing closed systems or techniques which only use water (e.g., glycol loop, hot water drilling)
	3.3 Prevent conditions that may require additional drilling by designing array deployment operations to ensure that array strings can be quickly installed before the water in a drilled hole refreezes
	3.4 Thoroughly test and carefully handle all array components to avoid instrument failures and avoid either abandonment of unserviceable equipment or recovered and redeployment of failed units
	3.5 Remove the IceTop DOMs and surface cables connecting the array to the Counting House at completion of Project activities

Table 6-1. Summary of Mitigating Measures

Aspect	Mitigating Measure
	3.6 Avoid the direct discharge of sanitary wastewater to the environment by: • Utilizing existing wastewater systems at the South Pole (e.g., main Station, old Station, Summer Camp) which discharge to existing and planned sewer bulbs • Containerize wastewater generated at the Project site rather than discharging it to the environment
	3.7 Prohibit the discharge of materials containing Designated Pollutants (e.g., industrial chemicals, fuel wastes) in any wastewater system
	3.8 Remove all wastes generated by the Project at the end of the operating season to the maximum extent practical. If wastes are temporarily stored during the austral winter: • Store containers in a manner to prevent them from becoming encrusted in snow and ice and possibly damaged upon retrieval • Store containers (e.g., drums) in a manner to prevent accidental releases to the environment (e.g., secondary containment) if accidentally damaged
	3.9 During material transfer activities such as filling bulk fuel tanks, refueling equipment and vehicles, and maintenance operations: • Develop and implement a consistent approach for all activities that incorporates spill prevention techniques including the use of containment devices (e.g., drip pans) and inspection for signs of spills or leaks following completion of the activity • Minimize the number of fuel transfer locations through use of a closed fuel distribution system (e.g., pipeline, hoseline) which incorporates spill prevention features such as protected (e.g., buried) lines and dry disconnect couplings, spill detection devices (e.g., flow sensors, alarms), and leak prevention practices (e.g., annual demobilization)
	3.10 If vehicles, equipment, or Designated Pollutants (i.e., hazardous materials) such as fuel, oils, and glycol are stored at the Project site: • Utilize appropriate spill containment devices (e.g., drip pans, absorbent pads) • Inspect bulk storage tanks, pipelines, valves, distribution pumps, and hoses regularly (e.g., daily) for leaks or damage • Inspect equipment (generator, heater) tanks, fuel lines regularly (e.g., daily) for leaks or damage • Inspect vehicle fuel tanks, oil pans, hydraulic lines, and coolant systems regularly (i.e., weekly) for leaks or damage • Inspect storage containers (e.g., drums, totes) regularly (i.e., weekly) for leaks or damage
	3.11 Store Designated Pollutant containers (e.g., tanks, drums, totes) during the austral winter in a manner to prevent them from becoming encrusted in snow and ice and possibly damaged upon retrieval

Table 6-1. Summary of Mitigating Measures

Aspect	Mitigating Measure
	3.12 Implement procedures contained in the *Amundsen-Scott South Pole Station Oil Spill Response Plan* (reference 7) for spill response actions and develop supplemental procedures for activities unique to Project IceCube
	3.13 Equip the Tower Operations and Seasonal Equipment Sites with spill response materials (e.g., shovels, absorbents, waste drums) to facilitate rapid and effective response to spills
	3.14 Provide adequate training to drilling personnel to ensure effective spill response
	3.15 Utilize Amundsen-Scott Station resources as needed for large spill response
	3.16 Cleanup leaks or spills immediately following their detection to the maximum extent practical, manage resulting contaminated materials as Antarctic Hazardous waste, and report all spills and remedial actions as required by 45 CFR §671
Amundsen-Scott Station Operational Impacts (4.0)	Clearly identify and delineate Project IceCube logistical needs during the planning process to ensure that Amundsen-Scott Station resources are available as needed and can be effectively coordinated with other users at the Station (e.g., operations, SPSM, other researchers)
South Pole Scientific Research Impacts (5.0)	5.1 Clearly identify and delineate Project IceCube science support needs during the planning process to ensure that potential physical disturbances or interferences with other research projects at the Amundsen-Scott Station or conflicts for limited resources (e.g., data transfer) can be effectively coordinated
	5.2 Conduct all Project IceCube activities within the operating restrictions of the South Pole science sectors
McMurdo Station Operational Impacts (6.0)	Clearly identify and delineate Project IceCube logistical needs during the planning process to ensure that McMurdo Station resources (e.g., personnel support, cargo management) are available as needed
Impact Monitoring (7.0)	7.1 Identify and document Project IceCube activities conducted each year that can be used to evaluate environmental impacts (e.g., fuel combustion, waste generation, environmental releases) using the *Permit Reporting Program*
	7.2 Audit Project IceCube activities on an annual basis to (1) determine if the Project-related activities are being performed as planned, (2) collect data needed to evaluate impacts (e.g., fuel consumed, substances released to the environment) and (3) initiate corrective actions as necessary to mitigate increased or unexpected impacts
	7.3 Inspect the Project site following demobilization for remaining materials or accidental releases, and remediate and report as necessary

Table 6-1. Summary of Mitigating Measures

Aspect	Mitigating Measure
Designated Pollutant Management (8.0)	Manage all Designated Pollutants (i.e., hazardous materials) used during the drilling and array deployment activities consistent with release prevention strategies and the requirements of the *USAP Master Permit* and provide: • Storage facilities sufficient to accommodate all Designated Pollutants to be stored onsite, segregate incompatible materials, and secure all materials stored outside • Containers that are structurally adequate to accommodate the handling and stresses expected during mobilization, drilling, and demobilization • Storage tanks which incorporate spill containment features (e.g., double-walled tanks, secondary containment) where feasible.
Waste Management (9.0)	9.1 Minimize packaging waste generated from material shipments by utilizing reusable packing and crating materials (i.e. cargo straps; permanent bracing in structures, reusable lumber).
	9.2 Manage all wastes generated during the drilling and array deployment activities consistent with the requirements of the *Waste Management Plan and Users Guidance* and provide the resources to: • Contain all wastes to avoid releases to the environment • Segregate and label hazardous waste and nonhazardous waste streams • Secure wastes during storage and transport • Record the type and amount of wastes generated and stored • Remove all nonhazardous wastes and transport to McMurdo Station for further disposition within the 3 year period specified by 45 CFR §671 • Remove all hazardous wastes and transport to McMurdo Station for further disposition within the 15 month period specified by 45 CFR §671
	9.3 Inspect Antarctic Hazardous waste containers for leakage or deterioration on a weekly basis and document the inspections per the *Waste regulation* (45 CFR §671.11(b))
Environmental Reporting (10.0)	Document all *USAP Master Permit*-related activities conducted by Project IceCube each year Through the *Permit Reporting Program,* , including: • Nonhazardous and Antarctic hazardous wastes generated, and their disposition • Planned releases, including measured quantities of materials released as well as indicator parameters that may be used to estimate selected releases (e.g., fuel consumption, water use, population) • Number, type and composition of accidental releases • Designated Pollutants stored onsite during the austral winter

6.3 Environmental Reporting and Review

All activities associated Project IceCube that relate to potential environmental impacts and compliance with U.S. environmental regulations will be documented and systematically evaluated. For example, the U.S. Waste Regulation (45CFR§671) is applicable to all U. S. activities in Antarctica. The Waste Regulation establishes requirements for the issuance of Permits and associated reporting with respect to the management of designated pollutants (i.e., hazardous materials), the management and disposition of wastes generated in Antarctica, and release of any substances in the environment. Pursuant to the Waste Regulation, NSF has issued the *USAP Master Permit* (reference 3) to the civilian support contractor, Raytheon Polar Services Company (RPSC) for the period 1 October 1999 through 30 September 2004. The current Permit is expected to be renewed on 1 October 2004. Activities conducted under Project IceCube will be subject to the terms and conditions of the applicable *USAP Master Permit.*

By 30 June of each year, RPSC (the Permit holder) prepares the *Annual Report for the USAP Master Permit* documenting activities conducted for the previous 12-month period at permanent stations and individual outlying facilities, regarding waste management and releases to the environment. All Project IceCube activities related to wastes and releases will be included in the Annual Report. In addition, the Permit holder will conduct an annual review to verify that the activities described in the Master Permit including those associated with Project IceCube are accurate and representative. Any revised conditions and significant changes will be identified and documented accordingly in subsequent *Amendments to the USAP Master Permit.*

The Permit holder has established a formal process to gather data needed for Permit reporting purposes known as the *Permit Reporting Program*. The program was designed to collect Permit-related information in an efficient and consistent manner addressing all activities conducted under the Permit at each permanent station and each individual outlying facility operated in the USAP. Relevant information pertaining to Project IceCube will be included into the *Permit Reporting Program* for subsequent use in the *Annual Report for the USAP Master Permit* and the *Amendments to the USAP Master Permit*.

Data obtained through the *Permit Reporting Program* will also be used to characterize activities and conditions that are used to monitor environmental impacts. For example, Permit-related parameters that are reported and evaluated each year include fuel consumption and associated air emissions, waste generation and disposition, and planned and accidental releases to the environment. These parameters will be reviewed to identify conditions which are significantly different than those described in the *USAP Master Permit*. Data pertaining Project IceCube and regularly obtained through the *Permit Reporting Program* will be evaluated based on the conditions and potential impacts assessed in this Comprehensive Environmental Evaluation.

7.0 GAPS IN KNOWLEDGE AND UNCERTAINTIES

7.1 Introduction

This section identifies gaps or uncertainties that may be present in the data or assumptions that were used to identify and evaluate the potential environmental impacts associated with Project IceCube. Much of the technical information related to the proposed action and evaluated in this environmental review was derived from Project IceCube design documents which have been under development and refinement for several years. Although further enhancements to the Project's technical or logistical approach may be realized in the future, it is not anticipated that these refinements will significantly change the conditions and conclusions described in this review.

Project IceCube is inclusive of numerous processes that have been developed in order to achieve the goal of constructing and operating a large neutrino telescope at the South Pole including:

- Develop the scientific specifications of the neutrino telescope
- Design and engineer the technical elements of the telescope and connection systems
- Design and engineer the equipment needed to drill deep holes in the ice sheet
- Procure, construct, and test the components for telescope and drilling equipment
- Develop computer protocols to capture, store, process, transfer, and analyze data from the telescope
- Identify logistical requirements for the transportation of equipment and personnel to the South Pole
- Drill holes in the ice sheet suitable for the telescope's detector systems
- Deploy the telescope's detector systems and connection systems including the counting house
- Operate the telescope and monitor all systems

For the purposes of this environmental review, the activities represented by these processes can be summarized in four technical areas: the scientific approach, drilling and array deployment activities, operation of the telescope, and data management. Data gaps or uncertainties in any or all of these areas could create inaccuracies in the evaluation of Project IceCube's impacts. The following identifies the data gaps or uncertainties that may exist:

7.2 Scientific Approach

Project IceCube is an expansion of the scientific approach and procedures that were successfully developed and implemented during the AMANDA project. This environmental review was based on the strategy to install a deep array of 4,800 digital optical modules (DOMs) arranged in 80 vertical strings and 320 DOMs near the surface encompassing a cubic kilometer volume in the polar ice sheet at the South Pole. There is no indication that this strategy will change and therefore there are no significant data gaps or uncertainties related to the scientific approach that could materially affect the conclusions of this environmental review.

7.3 Drilling and Array Deployment

The proposed techniques and equipment that will be used to drill holes in the ice sheet at the South Pole and deploy the array of detectors have been under development for a number of years. Many of the techniques and equipment are enhancements to designs successfully implemented for the AMANDA project. Therefore, it is not expected that the basic approach of using the enhanced hot water drill to

create holes in the ice sheet for the deployment of the detector strings will change significantly for the methods evaluated herein.

Considerable engineering expertise has been employed to design, specify, and construct the equipment needed to drill holes in the ice sheet and deploy the detector strings. Based on these specifications and the recommended operating parameters, this environmental review identified potential environmental impacts associated with these actions. It is possible that some of the specific types of equipment or the specified operating parameters (e.g., frequency or duration of use) may change slightly from the conditions evaluated in this environmental review, but the overall performance of the Project will essentially remain the same and therefore the potential impacts described herein are representative of the proposed action.

Many factors could affect the schedule for drilling and array deployment activities and therefore the intensity of the associated impacts that these activities may produce. Planners have developed a relatively aggressive schedule for the 7-year installation of the neutrino telescope at the South Pole. Even if conditions change and progress is either slowed or accelerated during a given year, the cumulative impacts of the propose action are accurately depicted in this environmental review.

Ideally, the best source of data to characterize air emissions from fuel combustion sources is derived from actual testing data. Estimates of several sources of the land-based emissions characterized in this CEE were based on stack testing data (i.e., Project IceCube water heaters, Station electrical generators). For other types of equipment used at the South Pole (e.g., vehicles, aircraft), generic emissions models were used to estimate exhaust gas emissions. In general, these models are used by regulatory authorities and risk assessors to provide conservative estimates of exhaust emissions. Inaccuracies in the emissions estimates derived from these models are not expected to affect the conclusions derived from this environmental review of Project IceCube.

7.4 Operation of the Telescope

Once the detector components and connection systems of the proposed neutrino telescope have been installed in the ice sheet at the South Pole and the counting house is functional, it is expected that the observatory will require little physical intervention and will not create a significant impact to the South Pole environment or the Amundsen-Scott Station. The telescope will require electrical power for operation, computer and satellite resources for data manipulation and transfer, and personnel support for maintenance and systems monitoring. There are environmental impacts associated with these operational activities but they are within the scope of research activities typically performed at the Amundsen-Scott Station and similar to other research projects conducted in the Dark Sector. Based on experience gained through the operation of the AMANDA and SPASE systems, it is anticipated that Project IceCube will achieve the data quality objectives established for the Project without any additional impacts not already acknowledged in this environmental review.

7.5 Data Management

Project IceCube is expected to produce an enormous quantity of data. The data is intended to be partially processed at the South Pole and transferred by satellite transmission to researchers for further processing and analysis. These data management activities have been specifically designed to meet the scientific objectives of the Project and provide sufficient data storage, backup, and transmission capabilities. Some uncertainty exists with regard to the availability of satellite support of sufficient capacity to accommodate Project IceCube and other research being conducted at the South Pole. Alternative options are being explored to ensure Project IceCube and other research projects at the South Pole have adequate data transmission capability. It is not anticipated that additional resources (e.g., satellite dish) will need to be

constructed at the Station. If new data management resources are needed at the Amundsen-Scott Station, a separate environmental review will be performed.

8.0 CONCLUSIONS

8.1 Introduction

The Comprehensive Environmental Evaluation (CEE) of Project IceCube has identified and evaluated potential impacts that may be realized as a result of the construction and operation of the proposed neutrino telescope at the South Pole. The significance of the potential impacts resulting from Project IceCube was evaluated relative to the initial environmental state (i.e., baseline conditions) present at the Amundsen-Scott Station. This environmental review considered several feasible options (see Section 2) for conducting the proposed action and characterized the foreseeable impacts to the environment using quantitative and qualitative methods.

The methods used to identify and evaluate the impacts of the proposed activities are consistent with the *Guidelines for Environmental Impact Assessment in Antarctica* (reference 1) and are similar to those used in recent CEEs prepared for similar types of proposed activities in Antarctica, including the Draft *Comprehensive Environmental Evaluation for ANDRILL* (reference 18) and the *Comprehensive Environmental Impact Evaluation for Recovering a Deep Ice Core in Dronning Maud Land, Antarctica* (reference 19) The following details the conclusions related to each of the potential impacts for the proposed action.

8.2 Physical Disturbances to the Snow/Ice Environment

The proposed telescope will occupy a cubic kilometer volume in the ice sheet at the South Pole. This area will be physically disturbed through the drilling and placement of 4,800 optical modules at 80 locations to depths of 2,450 meters and 320 optical modules near the surface. These disturbances will occur in the Dark Sector, a previously disturbed area at the South Pole that is designated for ongoing scientific research. Although the area will remain disturbed for at least as long as the service life of the telescope, the proposed action does not expand the footprint of the Amundsen-Scott Station. As a result, the physical disturbances resulting from Project IceCube are not considered to be significant and will not adversely impact the environment.

8.3 Air Emissions

The combustion of fuel and the resulting release of exhaust byproducts to the atmosphere will be a consequence of the proposed action at the South Pole. Most of the fuel used to support Project IceCube will be consumed during ice sheet drilling and array deployment phases of the Project. During this period, fuel consumption at the South Pole will increase by an average of 21 percent annually above baseline conditions and fuel combustion byproducts released to the air will also increase. Although the fuel usage and air emissions resulting from Project IceCube are significant, the exhaust gases and particulates are expected to dissipate in the atmosphere downwind of the South Pole. Analogous to conditions currently present at the South Pole, these emissions may be measurable in proximity to their sources, but the emissions are not expected to pose a long-term or adverse impact to the local air quality or surface albedo.

Fuel combustion byproducts will also be released to the atmosphere from aircraft used to logistically support Project IceCube. During the ice sheet drilling and array deployment phases of the Project, the number of support flights and the corresponding air emissions will increase by approximately 20 percent compared to baseline levels. Since most of the air emissions from aircraft occur at cruise altitude and speed, exhaust gases and particulates are expected to dissipate in the atmosphere with no noticeable adverse impact on air quality.

8.4 Releases to Snow/Ice Environment

Various types of materials or substances will be released to the environment in the vicinity of the South Pole either intentionally or accidentally as a result of Project IceCube. The array components (e.g., detectors, cable) will be frozen deep in the ice sheet and for all practical purposes will become irretrievable. Once the telescope reaches the end of its service life, the release of these components will result in a localized long-term impact potentially limiting future research in this area of the ice sheet. Wastewater produced from activities used to support Project IceCube personnel will be discharged into cavities deep in the ice sheet along with wastewater from the rest of the Amundsen-Scott Station. Although the wastewater will become permanently frozen in the ice sheet, it will be isolated below the surface and will not pose a threat to human health or the environment. Other miscellaneous materials may be encrusted in ice and snow and abandoned because it is not practical to retrieve them. These abandoned objects will not contain hazardous materials and will not pose an adverse impact to the environment.

Throughout the ice sheet drilling and array deployment phases of Project IceCube, substantial quantities of fuel will be handled and consumed some of which may be accidentally released (i.e., spills, leaks) to environment. Although the nature and timing of such releases cannot be predicted, spills of hazardous materials could represent a potential impact to the environment. However, spill prevention measures have been incorporated into the design of the equipment and procedures used on the Project and if a spill occurs, control measures are already in-place at the South Pole to rapidly respond to a release incident. Should a fuel spill occur on the snow surface, most of the product would be expected migrate vertically through the snow firn until it reaches impermeable ice where it would spread laterally and would be virtually impossible to recover. In general, spills which have the potential to affect the environment are relatively infrequent at the South Pole but when they do occur represent a long-term but localized impact.

8.5 Impacts to Amundsen-Scott Station Operations

Activities needed to support Project IceCube will impact operations at the Amundsen-Scott Station including personnel support functions (e.g., berthing, food services), telecommunications, and use of fuel handling, equipment, vehicles, waste management, and construction services. All of these support functions have sufficient capacity to accommodate Project IceCube without sacrificing essential services at the South Pole or compromising the final phase of the South Pole Station Modernization (SPSM) project. The proposed schedule for Project IceCube has been designed to coordinate the use of these shared resources. It is expected that Amundsen-Scott Station operations and SPSM construction will be able to accommodate the Project's needs without significant compromise or additional impact to the environment. In the event that the USAP develops and implements an overland traverse capability to resupply the Amundsen-Scott Station, this resource will also be shared to ensure that the USAP is able to make optimum use of all cargo transport resources.

8.6 Impacts to Science at the South Pole

Project IceCube is a significant USAP undertaking in terms of the time and resources needed for construction, the physical size of the telescope, and resources needed to collect, transmit, and analyze data from the system. There is little doubt that Project IceCube will achieve significant strides in the detection and evaluation of high-energy subatomic particles (i.e., neutrinos) and their sources but other activities at the South Pole may be affected by this resource-intensive project. Other research projects requiring extensive resource support could potentially be delayed or scaled-down because resources such as airlift capability, personnel support (e.g., berthing, food service), equipment and construction support, may be functioning near maximum capacity levels during Project IceCube and may not be available to other projects when needed.

Project IceCube was designed to be constructed and operated in the Dark Sector of the Amundsen-Scott Station. Project activities will be thoroughly planned and coordinated with ongoing science projects at the South Pole to ensure that side effects associated with the Project such as electromagnetic radiation, vibration, or noise would not interfere with other research. In addition, the Project site, as well as the main Station, is downwind of ambient air monitoring equipment (i.e., Clean Air Facility) that is sensitive to air emission sources.

Project IceCube will produce a significant quantity of raw data. The data will be filtered and stored at the Amundsen-Scott Station for subsequent transmission by satellite to various research facilities around the world for analysis. Limitations in the availability of current satellite resources could potentially delay or inhibit the transmission of data from Project IceCube and other science projects.

8.7 Impacts to Other Science in the USAP

Project IceCube will require significant airlift support to transport equipment, fuel, and personnel to the South Pole particularly during the seven-year installation period of the telescope. Most cargo shipped from McMurdo Station to the Amundsen-Scott Station and distant field camps is transported on ski-equipped LC-130 aircraft. Given that the LC-130 aircraft only operate in Antarctica during the austral summer season and that there are a large number of activities (e.g., facility resupply, construction, science) competing for limited flight support, some science projects may have to be delayed or scaled-down during Project IceCube particularly during the first several years of the Project when the LC-130 resources are operating near maximum capacity.

Project IceCube is expected to cause a minor and indirect impact at McMurdo Station related to the handling and storage of cargo but this impact will be of short-term duration.

In summary, no significant direct or cumulative impacts are expected from the combined operation of Project IceCube and other research projects at the South Pole or other USAP locations.

8.8 Summary

Project IceCube is a significant scientific undertaking in the USAP representing a major commitment of resources and potentially resulting in measurable environmental impacts. The potential scientific benefits of the proposed Project have been thoroughly evaluated and are deemed to be substantial. The environmental impacts resulting from the Project represent a relatively small increase in the environmental impacts already being realized at the South Pole as a result of the current level of research and support activities being conducted. Overall, the projected impacts associated with Project IceCube activities were determined to be more than minor or transitory but the impacts are localized and would not result in a widespread adverse impact to the environment at the South Pole or other locations in Antarctica.

8.8.1 NONTECHNICAL SUMMARY

This Comprehensive Environmental Evaluation of Project IceCube was prepared by the National Science Foundation to evaluate potential impacts resulting from the proposed construction and operation of a high-energy neutrino telescope at the South Pole. The telescope is designed to detect subatomic particles (i.e., neutrinos) produced by various high-energy events such as supernova. Unlike photons or other charged particles, neutrinos can travel long distances unaffected by interference from magnetic fields or matter, making neutrinos a valuable tool for the study of the universe. The proposed telescope is a second-generation instrument based on the evolution of a smaller neutrino telescope at the South Pole known as AMANDA. The successful deployment and operation of the AMANDA detector has shown that the Antarctic ice sheet is an ideal medium and location for this type of research and that a much larger detector is needed in order to detect a wider diversity of possible signals from distant sources.

Description of Proposed Activities

Project IceCube would feature the design, installation, and operation of a second-generation high-energy neutrino telescope at the South Pole in an area near the Amundsen-Scott Station currently designated for scientific research. Project IceCube would consist of a deep and surface array of optical modules systematically-placed within a cubic kilometer of ice at the South Pole. Each component of the array would be connected to a data processing facility centrally located within the array pattern. Project IceCube would encompass the existing AMANDA neutrino detector and the SPASE-2 air shower detector at the South Pole. The Project would be installed over a seven year period and would have an operational service life of at least 15 years.

Project IceCube would be supported by a combination of resources both dedicated to the Project as well as resources provided by the Amundsen-Scott South Pole Station. Deployment of the strings of detectors in the ice sheet would involve the use of dedicated facilities at the Project site that would provide power generation, water heating, and drilling resources. These facilities will be mobilized and demobilized each year of the six-year drilling period and, at the completion of all drilling activities, will be removed from the Project site. Holes in the ice sheet will be created using an Enhanced Hot Water Drill (EHWD) system which heats water to high temperature and pumps it under high pressure through a drill nozzle. Each hole will be filled with hot water as it is drilled and the deep array string of detectors will be lowered to its target depth and allowed to freeze, securing the string in the ice sheet.

Supplementing the assets dedicated to Project IceCube (e.g., personnel, equipment), additional resources would be shared with the Amundsen-Scott Station including personnel support facilities and services (e.g., berthing, food), cargo, fuel, waste handling facilities, and communications services to facilitate data upload. Logistical support for the transportation of Project materials and personnel from McMurdo Station, Antarctica, to the South Pole would be provided by the existing fleet of LC-130 aircraft. Most materials and equipment would be expected to be transported to McMurdo Station by ship. Because the South Pole Station Modernization Project (SPSM) will be ongoing through 2007, careful planning of shared resources, particularly personnel support facilities and services, would be needed to ensure that the requirements of ongoing Station operations, SPSM, and Project IceCube can be met without significant compromise.

Environmental Impacts

Project IceCube will disturb up to a cubic kilometer volume in the ice sheet at the South Pole during drilling and placement of the array strings. These activities will occur in the Dark Sector, a previously disturbed area at the South Pole that is designated for ongoing scientific research. These disturbances will

not expand the footprint of the Amundsen-Scott Station and will not adversely impact the environment at the South Pole.

Activities needed to support Project IceCube will require the combustion of fuel and will result in the release of exhaust emissions to the atmosphere. These air emissions will be in addition to the exhaust emissions from other operations performed at the Amundsen-Scott Station. Project IceCube activities will cause the fuel consumption at the South Pole to increase by 21 percent with a related increase in exhaust emissions released to the air. The emissions of exhaust gases and particulates are expected to dissipate downwind of the Station and may be measurable but are not expected to pose a long-term or adverse impact to the local air quality or surface albedo.

Project IceCube will result in the release of various materials and substances to the environment. The physical components of the array will be frozen deep in the ice sheet and, at the completion of the Project, will represent an irretrievable release that will result in a localized long-term impact and potentially limiting future research in this area. Wastewater generated by Project personnel support activities will essentially be combined with wastewater from the rest of the Station and discharged into cavities deep in the ice sheet. Consistent with the impacts of current operations at the South Pole, the wastewater will become permanently frozen and isolated in the ice sheet and will not pose a threat to human health or the environment.

Activities conducted to support Project IceCube will impact various operations at the Amundsen-Scott Station including personnel support functions, telecommunications, and use of fuel distribution, vehicles, waste management, and other equipment and services. Through proper planning, scheduling, and communications, the Amundsen-Scott Station will be able to accommodate Project needs without compromising Station operations or interfering with other research projects at the South Pole. Other research projects requiring extensive resource support could potentially be delayed or scaled-down because resources such as airlift capability, personnel support (e.g., berthing, food service), equipment and construction support, may be functioning near maximum capacity levels during Project IceCube and may not be available to other projects when needed.

Mitigating Measures and Monitoring

A large number of mitigating measures potentially applicable to Project IceCube activities and representing specific actions or options that may be taken to reduce or avoid impacts to the environment have been identified in the CEE. Many of these mitigating measures involve the selection of certain types of equipment or the implementation of various control procedures has already been incorporated into the Project's design. Numerous mitigating measures focus on the control or elimination of substances that may be released to the environment and the related requirements of the *USAP Master Permit*.

All Project IceCube activities that relate to potential environmental impacts (e.g., releases) will be documented and periodically reviewed relative to the conditions assessed in this environmental review. Impacts that are substantially different than those projected in the CEE will be reassessed and if significant, additional mitigating measures or procedural changes may be implemented. Data characterizing Project activities will also be used to evaluate compliance with U.S. environmental regulations applicable to activities in Antarctica, and will be reported consistent with the terms and conditions of the *USAP Master Permit*.

Conclusions

Project IceCube is a significant scientific undertaking in the USAP representing a major commitment of resources and potentially resulting in measurable environmental impacts. The potential scientific benefits

of the proposed Project have been thoroughly evaluated and are deemed to be substantial. The environmental impacts resulting from the Project represent a relatively small increase in the environmental impacts already being realized at the South Pole as a result of the current level of research and support activities being conducted. Overall, the projected impacts associated with Project IceCube activities were determined to be more than minor or transitory but the impacts are localized and would not result in a widespread adverse impact to the environment at the South Pole or other locations in Antarctica.

9.0 REFERENCES

(1) Council of Managers of National Antarctic Programs (COMNAP). *Guidelines for Environmental Impact Assessment in Antarctica.* June 1999.

(2) The IceCube Collaboration. *IceCube Preliminary Design Document, Revision: 1.24*. October 11, 2001.

(3) National Science Foundation. *USAP Master Permit.* Permit Number 2000WM-01(RPSC) Mod. 1. March 23, 2000. Incorporates by reference the Master Permit Application dated 15 April 1999 and Permit Conditions dated 27 August 1999.

(4) University Of Wisconsin – Space Science & Engineering Center, Antarctic Astronomy & Astrophysics Research Institute. *IceCube Project Safety Manual.* 9000-0002. Revision A. March 5, 2003.

(5) Raytheon Polar Services Company. *Annual Report for the USAP Master Permit.* June 30, 2003, June 30, 2002, June 30, 2001.

(6) Jamestown Marine Services, Inc. *U.S. Antarctic Program Spill Prevention, Control, and Countermeasures (SPCC) Plan*. September 1994.]

(7) Jamestown Marine Services, Inc. *Field Camp Oil Spill Response Guidebook.* August 1993.

(8) National Science Foundation. *Final Supplemental Environmental Impact Statement for the U.S. Antarctic Program.* October 1991.

(9) National Science Foundation. *Modernization of the Amundsen-Scott South Pole Station, Antarctica.* Final Environmental Impact Statement. May 1998.

(10) National Science Foundation. *Antarctic Muon and Neutrino Detector Array (AMANDA) Project at the South Pole.* Initial Environmental Evaluation. 1993.

(11) National Science Foundation. *Amendment No. 1. Completion of AMANDA and Development of Second-Generation Antarctic Muon and Neutrino Detector Array: AMANDA-Mark II at Amundsen-Scott South Pole Station, Antarctica.* Environmental Document and Finding of No Significant and Not More Than Minor or Transitory Environmental Impact. August 22, 1995.

(12) National Science Foundation. *Amendment No.2: Completion of AMANDA and Development of Second-Generation Antarctic Muon and Neutrino Detector Array: AMANDA-Mark II at Amundsen-Scott South Pole Station Antarctica.* Environmental Document and Finding of No Significant and Not More Than Minor or Transitory Environmental Impact. July 30, 1996.

(13) National Science Foundation. *Development of and Planning, Construction, Operation, and Decommissioning of New, Expanded, or Relocated Field Camps in Antarctica.* Environmental Document and Finding of No Significant And Not More Than Minor Or Transitory Environmental Impact. 2003.

(14) U.S. EPA Office of Air and Radiation. *Compilation of Air Pollutant Emission Factors*. AP-42, Volume II, Mobile Sources, Fourth Edition. September 1985.

(15) Lawrence Berkeley National Laboratory. *Black Carbon Aerosol at McMurdo Station, Antarctica.* December 2000.

(16) Magee Scientific Company. *Measurement of Combustion Effluent Aerosols from The South Pole Station*. Final Report. November 2000.

(17) Magee Scientific Company. *Measurement of Combustion Effluent Carbonaceous Aerosols in the McMurdo Dry Valleys*. Report of Initial Findings. February 2001.

(18) McMurdo Sound Portfolio. *Draft Comprehensive Environmental Evaluation for ANDRILL*. January 22, 2003.

(19) Alfred-Wegener-Institute, Foundation for Polar and Marine Research (AWI). *Comprehensive Environmental Impact Evaluation for Recovering a Deep Ice Core in Dronning Maud Land, Antarctica.* October 4, 2000.

10.0 APPENDICES

APPENDIX A
AMUNDSEN-SCOTT STATION WASTEWATER CHARACTERISTICS

Appendix A
Amundsen-Scott Station Wastewater Characteristics

Table A-1 Amundsen-Scott Station Sewage Testing Results
Table A-2 Wastewater Characterization Sample Results for Untreated Wastewater (McMurdo Station)

APPENDIX B
AIR EMISSIONS FROM FUEL COMBUSTION SOURCES AT THE SOUTH POLE

Appendix B
Air Emissions from Fuel Combustion Sources at the South Pole

Table B-1 Estimated Annual Air Emissions from Fuel Combustion Sources at the Amundsen-Scott Station During Year 1 Of Project Ice Cube

Table B-2 Estimated Annual Air Emissions from Fuel Combustion Sources at the Amundsen-Scott Station During Year 2 and Beyond Of Project Ice Cube

Table B-3 Estimated Annual Air Emissions from Fuel Combustion Sources Operated By Project Ice Cube During Year 1

Table B-4 Estimated Annual Air Emissions from Fuel Combustion Sources Operated By Project Ice Cube During Year 2

Table B-5 Estimated Annual Air Emissions from Fuel Combustion Sources Operated By Project Ice Cube During Year 3

Table B-6 Estimated Annual Air Emissions from Fuel Combustion Sources Operated By Project Ice Cube During Year 4

Table B-7 Estimated Annual Air Emissions from Fuel Combustion Sources Operated By Project Ice Cube During Year 5

Table B-8 Estimated Annual Air Emissions from Fuel Combustion Sources Operated By Project Ice Cube During Year 6

Table B-9 Estimated Annual Air Emissions from Fuel Combustion Sources Operated By Project Ice Cube During Year 7

Table B-10 Estimated Annual Air Emissions from Fuel Combustion Sources Operated By Project Ice Cube During Year 8 and Beyond

APPENDIX C
AIR EMISSIONS FROM FUEL EVAPORATION AT THE SOUTH POLE

Appendix C
Air Emissions from Fuel Evaporation at the South Pole

Table C-1 Estimated Annual Fuel Evaporative Emissions for the Amundsen-Scott Station During Project Ice Cube

Table C-2 Estimated Annual Fuel Evaporative Emissions for Project Ice Cube

APPENDIX D
AIR EMISSIONS FROM LOGISTICAL SUPPORT AIRCRAFT

Appendix D
Air Emissions from Logistical Support Aircraft

Table D-1 Detailed Air Emissions from Aircraft Used For Intercontinental Missions Supporting Activities at the South Pole During Years 1 - 8 of Project IceCube (Baseline Conditions)

Table D-2 Detailed Air Emissions from Aircraft Used For Intracontinental Missions Supporting Activities at the South Pole During Years 1 - 8 of Project IceCube (Baseline Conditions)

Table D-3 Detailed Air Emissions from Aircraft Used For Intercontinental Missions Supporting Project IceCube (Years 1 – 8)

Table D-4 Detailed Air Emissions from Aircraft Used For Intracontinental Missions Supporting Project IceCube (Years 1 – 8)